Data sheet

PMX

Modular measuring amplifier system

Special features

- **Up to 16 measurement inputs with TEDS sensor detection**
- **24-bit A/D converter and 19,200 Hz/38,400 Hz data rate per channel**
- **Automatic synchronization of several devices**
- **32 calculation channels with peak/limit values and mathematical functions**
- **Digital inputs/outputs, analog outputs**
- **Fast PROFINET/EtherCAT® EtherNET/IP**
- **Optional: CODESYS Soft-PLC and CANopen interface**
- **Robust DIN rail or wall mounting**
- **Operation via web browser with three-phase user guidance (Worker, Service, Admin)**

Block diagram

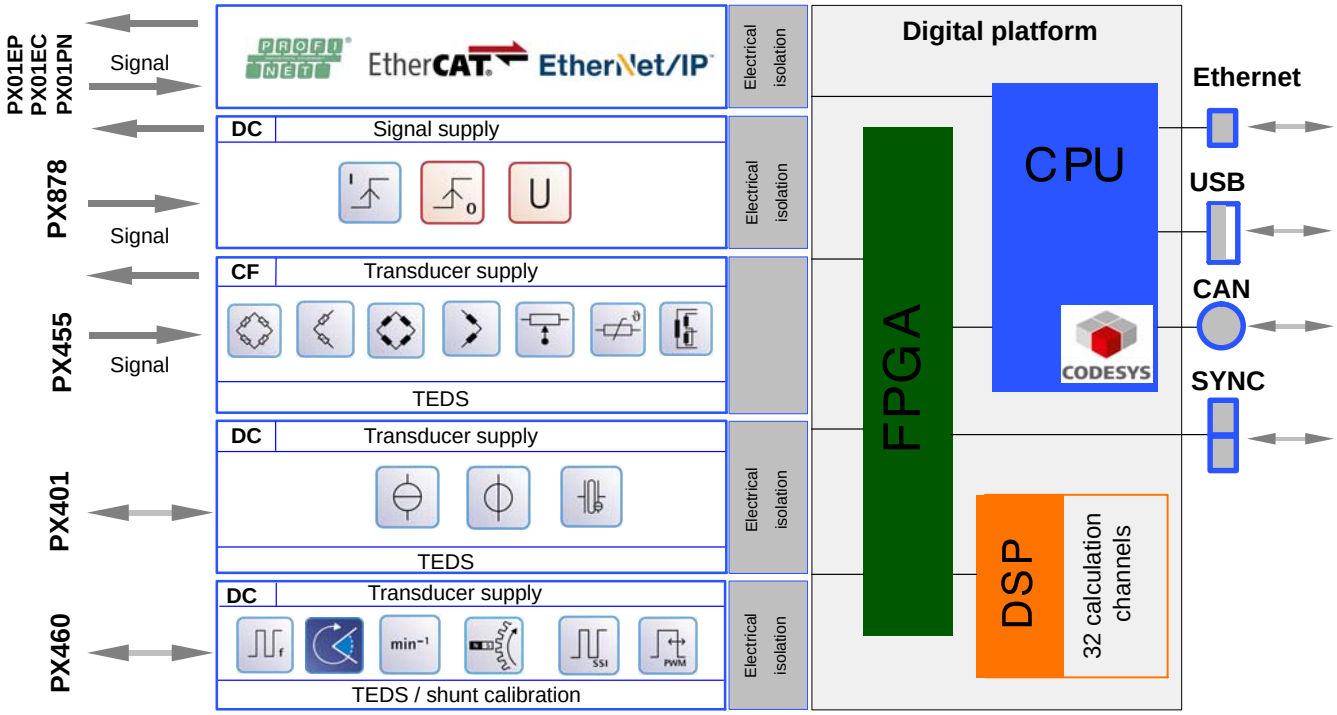

Specifications

Basic device		WGX001/002
Modules	number	1 communication card, 4 measuring cards
Supply voltage range	V_{DC}	10 to 30 (nominal (rated) voltage 24 V)
Supply voltage interruption (based on PLC standard DIN EN 61131-2)		
24 V (- 10 %)	ms	10
12 V (- 10 %)	ms	1
Power consumption at 24 V supply voltage		
Basic device	W	3
per PX455	W	1.6
per PX401	W	0.75
per PX460	W	2
per PX878	W	2
EtherCAT®[1)] fieldbus module PX01EC	W	1.9
PROFINET fieldbus module PX01PN	W	2.3
Ethernet/IP fieldbus module PX01EP	W	2.2
Ethernet (data link)		IEEE802.3.; 10 Base-T / 100 Base-TX
Protocol/addressing		TCP/IP (direct IP address or DHCP)
Plug connection		RJ45, 8-pin
Cable type		Standard LAN, CAT5, SFTP
Max. cable length to module	m	100
Synchronization		
NTP protocol		Time via Ethernet
HBM protocol	-	Measured values in measuring raster and carrier frequency (module to module)
Plug connection		RJ45, 8-pin
Cable type		Standard LAN, CAT5, SFTP
Number of devices		20
Line lengths between neighboring devices, max.	m	30
USB connection		USB 2.0 Host
Function		- Resets all device parameters to the factory settings - Sets the device name and network settings - Resets user passwords - Stores measured data (using free CODESYS application)
CAN connection		CANopen interface only with WGX001 (CAN ISO11898)
Real time calculation in device		CAN 2.0b
Sum sampling rate	MW/s	400,000
Calculation channels	number	32 in real time (max. 48 for unternal calculations)
Update rate	Hz	19200
Function		Peak values, limit values, mean values, root mean square values (RMS), tolerance bands, mathematic calculation channels, logic functions, signal characteristics, signal generators, 2-point scaling, 2-point controllers, PID controllers, filters, multiplexers, sample-hold, time calculation, counters, triggers, 3x3 matrices calculation, SG-rosette calculation, coordinate calculation (polar <-> cartesian), CODESYS connection
Peak value memories		
Number		32
Reference level		all measurement signals, all calculation channels
Function		Min./ Max., peak-to-peak
Update rate	µs	52
Delete		
via digital inputs	ms	1
via fieldbus	ms	20
Limit value switches		
Number		32, via fieldbus and Ethernet data link 8 via digital outputs per PX878 (max. 2 PX878 can be inserted)
Reference level		All measurement signals, all calculation channels
Function		Overshooting/undershooting a level Within/outside a tolerance band
Response time, typical	µs	300

[1)] EtherCAT® is a registered brand and patented technology, licensed by Beckhoff Automation GmbH, Germany

Specifications (basic device continued)

Digital inputs Number Function Response time, typical	 ms	 32 max. 17 to 32, via fieldbus and Ethernet data link 1 to 8 via digital signals per PX878 (max. two PX878 can be inserted) Zero balance, tare, reset limit value, digital output, parameter set selection (bit-coded), calculation channel flags, CODESYS flags 1
Digital outputs Number Function Response time, typical	 ms	 16, via fieldbus and Ethernet data link 8 signals per PX878 (max. two PX878 can be inserted). High-Side-switch version Measured value/system status, digital input, fieldbus flag, limit value switch, current parameter set number (bit-coded), flags, calculation channels, CODESYS flags) 1
Parameter sets Number Parameter subsets Changeover time	 ms	 100, each parameter set comprises 4 parameter subsets Sensor settings, measurement acquisition, limit values, digital outputs Sensor data / Acquisition / Limit values / Digital output / AST*) 1,200 / - / - / - / 1,200 - / 950 / - / - / 950 1,200 / 950 / - / - / 2,150 - / / 100 / - / 100 1,200 / 950 / 100 / - / 2,250 - / - / - / 80 / 80 1,200 / 950 / 100 / 80 / 2,330 *) Average switching time, typ. (ms)
Log file Storage location File size, max. Optional	 MB	 For logging all parameter changes of all users in the device 20 Transfer via network profile (RCF5424) to a network PC/server
Nominal (rated) temperature range	°C	0 to 50
Operating temperature range (no condensation allowed/module not immune to water condensation)	°C	-10 to +60
Storage temperature range	°C	-20 to +70
Rel. humidity	%	5 to 95 (non-condensing)
Protection class (height up to 2000 m, degree of pollution 2)		III
Degree of protection		IP20 per EN60529
Mechanical stress capability (test similar to DIN IEC EN600068, Part 2-6) **Oscillation** (30 min. in each direction) **Impact** (3 times in each direction; impact duration 11 ms) (test similar to IEC/EN 60068, Part 2-27)	 m/s^2 m/s^2	 25 (5 to 65 Hz) 200
EMC requirements		as per EN 61326 and EN 55011 (Class B) Relevant directive: 2004/108/EC Relevant standards: Immunity from interference; DIN EN61326-1, Issue 2006-10 Table 2 (industrial environments) Emission (EME) DIN EN61326-1, Issue 2006-10, Class B
Quality certificate		
Certificate of compliance		A PDF document of the manufacturer's certificate as per EN10204 2.1 is stored in the PMX device memory and can be downloaded via the PMX browser.

Specifications (basic device continued)

EMC update		The scope of inspection was updated with the requirements of the “EMC integration guideline for achieving electromagnetic compatibility in electrical systems in the automotive industry" Version 1-03: EN61000-4-4: Burst test 2 kV EN55022: Interference current, interference voltage: expansion of frequency range 9 kHz - 30 MHz
Quality requirements EMC requirements Long-term stability		Evaluation criteria A are met in all EMC tests. This means that the operating behavior, i.e. accuracy and functions, is maintained within the specified data of the data sheet even during EMC loading. All PMX components are pre-aged for 7 hours in an oven run to improve long-term stability.
Fuses Automatic current limiter Short-circuit resistance		per device and per device card Synchronization/fieldbus/input and output signals are secured against mix-ups and short circuits
Dimensions (H x W x D)	mm	200 x 200 x 122
Weight (fully equipped), approx.	g	2750

Soft-PLC control (with WGX001)		**CODESYS**
Programming language		IEC61131-3
RAM	MByte	10
Flash memory	MByte	100
Timer resolution	Hz	300, for timer-controlled tasks (3.33 ms)
Number of tasks		100
CODESYS channels available in PMX		30 to 14, dependent on the hardware configuration (number of channels available = 30 minus number of fitted channels)
Available channels in CODESYS	16 32 1 1 32 4	Measurement channels and status Calculation channels and status 64-bit timer stamp System status Limit value status Slot status
CODESYS web visualization		Creating the web visualization with CODESYS software as an application suitable for running in PMX The visualization can be used on all browser-based devices via the PMX Ethernet-TCP/IP interface

Specifications (basic device continued)

CAN interface (with WGX001)								
Number of CAN interfaces		1						
Bus link		Two-wire per ISO11898-2						
Potential separation		60 V DC voltage for supply and measurement ground						
Protocol with CODESYS		CANopen 2.0b, CiA301, 302, 405, 401, 306						
CANopen		Node guarding, Sync producing/consuming						
CAN channels available in the PMX Internal in CODESYS, amx. Can be used in calculated channels or mapped to analog output, fieldbus or Ethernet		128 30 to 14, depending on the hardware configuration						
CAN signal types		USINT, INT UINT, DINT UDINT, LINT ULINT, REAL SINT, LREAL						
Baud rate	baud	20 k	50 k	100 k	125 k	250 k	500 k	1 M
Line length	m	1,000	1,000	1,000	500	250	100	25
CAN Master (CODESYS)		Several SDO channels, EDS and DCF file import; no DBC format, PDO mapping CIA401 (module-dependent), Low Level CAN library						
CAN Slave (CODESYS)		Static PDO mapping, SDO parameter ranges, EDS file generation with the CODESYS programming system						
Number of PDO, Transmit or Receive		Max. 16 PDO streams with a total data size of max. 128 bytes						
PDO transfer		Timer controlled up to max. 300 Hz, measured value controlled up to max. 1.2 kHz or per SYNC message (type: External, event: MeasVal/Event)						
Number of SDO		Max. 199 x 255 subIDs						
Create PDO, SDO		in the CODESYS programming environment						
Connection technique		1 x M12						

Transmit / receive CAN data				
Number of signals to be received/transmitted		128, maximum		
Number of signals at 1 Mbit/s, REAL format, 32 bit				
Signals		Read/Send rate (Hz)	Measured value controlled (Hz)	Timer controlled (ms)
2		1200	1200	-
4		160	-	6
8		160	-	6
16		160	-	6
24		100	-	10
32		80	-	12

Specifications Measurement cards

SG and inductive full/half bridge, 4.8 kHz CF		PX455		
Accuracy class Fullbridge Halfbridge		 0.05 0.1		
Carrier frequency (sine)	Hz	4,800 ±0.1%		
Bridge excitation voltage (effective)	V	2.5 ± 5%		
Connectable transducers 1)3) in six or five wire circuit SG half and full bridges Inductive half and full bridges, LVDTs	 Ω mH	 120 to 1,000 4 to 33		
Potentiometer		Deviations in accuracy class		
Cable length	m	1	50	100
Resistance value 1 kΩ Resistance value 5 kΩ	% %	< 0.1 < 0.1	< 0.2 < 3	< 0.5 < 8
PT100 resistance thermometer (in conjunction with a 100 Ω completion resistor as a half bridge circuit)	°C	− 100 … + 500		
Measurement frequency range (-3 dB)	kHz	2		
Data rate, max.	Hz	19200 per channel		
D/A converter resolution	bit	24		
Active low-pass filter (Bessel/Butterworth) 6th order	Hz	0.1 to 2000		
Transducer connection		Plug terminals 4 x 7-pin		
TEDS, IEEE1451.4		0-wire2)4)		
Permissible cable length between PX455 and transducer	m	100 4)		
Measuring ranges SG Inductive LVDT	 mV/V mV/V mV/V	 ±4 ±100, ±1,000, ±500		
Nominal (rated) temperature range	°C	0 to 50		
Operating temperature range (no condensation allowed/module not immune to water condensation)	°C	-10 to +60		
Storage temperature range	°C	-20 to +70		
Rel. humidity	%	5 to 95 (non-condensing)		
Protection class (height up to 2000 m, degree of pollution 2)		III		
Degree of protection		IP20 per EN60529		
EMC requirements		as per EN 61326 and EN 55011 (Class B)		
Non-linearity	%	0.03		
Zero drift (excitation, 2.5 V) at 4 mV/V rel. to full scale value	% / 10 K	Full bridge: 0.05 Half bridge: 0.1		
Full-scale drift (excitation, 2.5 V) at 4 mV/V rel. to measured value	% / 10 K	Full bridge: 0.05 Half bridge: 0.05		
Half-bridge offset 5) (at 350 ohms and a cable length of < 5 m)	µV/V	< ±50		
Accuracy class of full bridge strain gage with Zener barrier (SD01A), 350 Ohm, cable length of up to 100 m	%	0.5		
Quality certificate				
Calibration certificate		A PDF document of the measurement card calibration certificate as per ISO 10012 is stored in the PMX device memory and can be downloaded via the PMX browser.		
SG full bridge 4 mV/V				
Noise at 25 °C and 2.5 V excitation (peak-to-peak) with 0.1 Hz Bessel filter with 1 Hz Bessel filter with 10 Hz Bessel filter with 100 Hz Bessel filter with 1 kHz Bessel filter with 2 kHz Bessel filter	 µV/V µV/V µV/V µV/V µV/V µV/V	 0.1 0.2 0.3 0.5 1.5 3		

1) With bridge resistances from RB > 500 ohms or cable lengths > 30 m: put transducer side resistors RB/2 in the feedback lines.
2) When using transducers with integrated 0-wire TEDS, RB/2 must be reduced by 100 ohms in each sense lead.
3) With transducers >350 ohms, the zero point must be calibrated with cables >50 m (tare/zero balance)
4) Transducer side TEDS cannot be read after RB/2>300 ohms
5) The zero point for half bridges is heavily dependent on the test setup, the line length and the line type and should be tared or set to zero by the user.

Specifications (PX455 continued)

Inductive full bridge 100 mV/V		
Noise at 25 °C and 2.5 V excitation (peak-to-peak)		
with 0.1 Hz Bessel filter	µV/V	2
with 1 Hz Bessel filter	µV/V	3
with 10 Hz Bessel filter	µV/V	4
with 100 Hz Bessel filter	µV/V	5
with 1 kHz Bessel filter	µV/V	10
with 2 kHz Bessel filter	µV/V	15
Inductive full bridge 1000 mV/V		
Noise at 25 °C and 2.5 V excitation (peak-to-peak)		
with 0.1 Hz Bessel filter	µV/V	20
with 1 Hz Bessel filter	µV/V	30
with 10 Hz Bessel filter	µV/V	40
with 100 Hz Bessel filter	µV/V	50
with 1 kHz Bessel filter	µV/V	100
with 2 kHz Bessel filter	µV/V	200
SG half bridge 4 m/V		
Noise at 25 °C and 2.5 V excitation (peak-to-peak)		
with 0.1 Hz Bessel filter	µV/V	1
with 1 Hz Bessel filter	µV/V	2
with 10 Hz Bessel filter	µV/V	3
with 100 Hz Bessel filter	µV/V	4
with 1 kHz Bessel filter	µV/V	5
with 2 kHz Bessel filter	µV/V	10
Inductive full bridge 100 m/V		
Noise at 25 °C and 2.5 V excitation (peak-to-peak)		
with 0.1 Hz Bessel filter	µV/V	2
with 1 Hz Bessel filter	µV/V	3
with 10 Hz Bessel filter	µV/V	4
with 100 Hz Bessel filter	µV/V	5
with 1 kHz Bessel filter	µV/V	15
with 2 kHz Bessel filter	µV/V	30
Inductive half bridge 500 m/V, LVDT, potentiometer		
Noise at 25 °C and 2.5 V excitation (peak-to-peak)		
with 0.1 Hz Bessel filter	µV/V	20
with 1 Hz Bessel filter	µV/V	30
with 10 Hz Bessel filter	µV/V	40
with 100 Hz Bessel filter	µV/V	50
with 1 kHz Bessel filter	µV/V	100
with 2 kHz Bessel filter	µV/V	200

Cut-off frequency (Hz) (-3 dB)		Runtime (ms)	
		Bessel	Butterworth
2000		0.16	0.23
1000		0.42	0.60
500		0.85	1.24
200		2.00	3.10
100		4.15	6.17
50		8.45	12.5
20		21.4	30.7
10		39	47
5		74	91
2		174	216
1		340	430
0.5		680	840
0.2		1,680	2,090
0.1		3,360	4,200

Specifications

Current module, voltage module		PX401
Accuracy class		0.1
Data rate	Hz	19,200 per channel
Measurement frequency range (-3 dB)	kHz	3
D/A converter resolution	bit	24
Active low-pass filter (Bessel/Butterworth) 6th order, IIR	Hz	0.1 to 3,000
TEDS, IEEE1451.4		1-wire
Transducer connection		Plug terminals 4 x 7-pin
Transducer excitation (active transducers) Voltage (DC) Current limiter	 V A	 equivalent to device excitation 400 mA/card
Electrical isolation from mains		60 V DC voltage between plug-in card and supply
Channels, individually switchable current/voltage	number	4
Max. common-mode voltage (to housing and supply ground)	V	50
Nominal (rated) temperature range	°C	0 to 50
Operating temperature range (no condensation allowed/module not immune to water condensation)	°C	-10 to +60
Storage temperature range	°C	-20 to +70
Rel. humidity	%	5 to 95 (non-condensing)
Protection class (height up to 2000 m, degree of pollution 2)		III
Degree of protection		IP20 per EN60529
EMC requirements		as per EN 61326 and EN 55011 (Class B)
Voltage (DC) ±10 V		
Measuring range	V	-10.5 to +10.5
Input impedance	MΩ	> 1
Noise at 25 °C (peak-to-peak) with 1 Hz Bessel filter with 10 Hz Bessel filter with 100 Hz Bessel filter with 1 kHz Bessel filter	 mV mV mV mV	 0.25 0.3 0.5 1
Common-mode rejection for DC common mode at 50/60 Hz common mode, typical	 dB dB	 100 80
Non-linearity at 25 °C	%	0.05
Zero drift rel. to full scale value	% / 10 K	0.1
Full scale drift rel. to measured value	% / 10 K	0.05
Current (DC) ±20 mA		
Measuring range	mA	±20
Value of load resistance	Ω	50 ±1%
Noise at 25 °C (peak-to-peak) with 1 Hz Bessel filter with 10 Hz Bessel filter with 100 Hz Bessel filter with 1 kHz Bessel filter	 µA µA µA µA	 0.5 0.6 1 2
Non-linearity	%	0.05
Zero drift rel. to full scale value	% / 10 K	0.1
Full-scale drift rel. to measured value	% / 10 K	0.1
Quality certificate		
Calibration certificate		A PDF document of the measurement card calibration certificate as per ISO 10012 is stored in the PMX device memory and can be downloaded via the PMX browser.

Specifications (PX401 continued)

Cut-off frequency (Hz) (-3 dB)		Runtime (ms)	
		Bessel	Butterworth
3000		0.10	0.14
2000		0.20	0.28
1000		0.42	0.61
500		0.86	1.23
200		2.00	3.10
100		4.15	6.17
50		8.45	12.5
20		21.4	30.7
10		39	47
5		74	91
2		174	216
1		340	430
0.5		680	840
0.2		1,680	2,090
0.1		3,360	4,200

The following applies for the **PX401** measuring card:

If the digital filter is switched off, only the hardware filter will function with a cut-off frequency of 3900 Hz (-3 dB).

Specifications

Frequency measurement card		PX460
Accuracy class (frequency measurement and counting)		0.01
Inputs	number	Channel 1/3 : frequency Channel 2/4 : frequency (digital, inductive), counter/encoder, SSI, PWM
Data rate	Hz	38400 per channel
Measurement frequency range (-3 dB)	kHz	6
Transducers that can be connected		Up to four measurement channels for frequency measurement up to 2 MHz or two angle/incremental encoders, SSI sensors, PWM sensors, magnetic transducers or pulse counters incl. two shunt calibrations and two 1-wire TEDS (sensor detection) HBM torque flanges (T10, T12, T40): max. four torque flanges for measuring torque (without rotational speed and without direction of rotation/angle of rotation measurement) Max. two torque flanges for simultaneous torque and rotational speed measurement (without direction of rotation/angle of rotation measurement) One torque flange for simultaneous torque, rotational speed, angle of rotation and direction of rotation measurement and reference signal detection
Transducer technologies **RS485 inputs** **AC input**		 Torque transducers, incremental rotary encoders, frequency signal sources (square wave) Passive inductive rotational speed sensors, frequency signal sources (any signal shape)
Transducer identification (TEDS, IEEE 1451.4) max. TEDS module distance	 m	 100
Transducer connection		Two 13 + 2-pin plug terminals
Power consumption	W	2
Transducer excitation (active transducers), the transducer excitation must be directed to the supply input from outside Maximum output power Transducer excitation input Transducer excitation voltage	 W V V	5 V and 10 - 30 V are available 2 x 48 W continuous power rating (at U_B = 24 V) 10 to 30, 3 A safety fuse, continuous current max. 2 A 5, continuous current max. 200 mA, continuous power rating max. 1 W
Electrical isolation from mains		60 V DC voltage between plug-in card and supply
Nominal (rated) temperature range	°C	0 to 50
Operating temperature range (no condensation allowed/module not immune to water condensation)	°C	-10 to +60
Storage temperature range	°C	-20 to +70
Rel. humidity	%	5 to 95 (non-condensing)
Protection class (height up to 2000 m, degree of pollution 2)		III
Degree of protection		IP20 per EN60529
Mechanical stress capability (test similar to DIN IEC EN600068, Part 2-6) **Oscillation** (30 min. in each direction) **Impact** (3 times in each direction; impact duration 11 ms) (test similar to IEC/EN 60068, Part 2-27)	 m/s^2 m/s^2	 25 (5 to 65 Hz) 200

Specifications (PX460 continued)

Transducer technology specifications		
Frequenzy signals (digital)		
Input frequency range RS485 inputs AC inputs	 Hz Hz	 0.1 to 2, 000 000 10 to 50,000
Frequency measurement resolution, min.	mHz	1
Square-wave signal measurement (RS485 inputs) F1 (+/-) F2 (+/-) Zero index signal (+/-)		Quadrature signals with index Frequency or pulse signal Directional signal offset by 90º to F1 Zero position signal
Input level (RS485 inputs) for single-pole mode (asymmetric) **Source at signal (+) and ground** Low level High level	 V V	 < 1,5 > 2,3
Input level (RS485 inputs) for differential signal mode (asymmetrisch) **Push-pull signal at signal (+) and signal (-)** Low level High level	 mV mV	 Signal (+) < signal (-) -200 Signal (+) < signal (-) -50
Input voltage range (RS485 inputs) Common-mode voltage range (to ground) Max. permissible voltages (to ground)	 V V	 -7 to +12 ± 15 (max. 1 mA continuous current)
Frequenzy signals (inductiv) at AC input (F1), passive only		
Input level for AC input (F1) Minimum level (sine-wave form, peak-to-peak) maximum level (peak-to-peak)	 V V V V	 0.1 (up to 1 kHz) 1 (at 10 kHz) 5.5 (at 50 kHz) 40
Counter signals (encoder)		
Counter (RS485 inputs) Frequency Increments	 Hz pulses	 0 to 2, 000 000 ± 8, 000 000
SSI signals (synchronous serial interface, active only)		
No. of data bits		6 . . . 31
Bit rate	kBit/s	10, 100, 200, 500, 1,000
Minimum around pause between data words (bit rate)	µs	1000 (at 10 kBit/s) 100 (at 100 kBit/s) 75 (at 200 kBit/s) 45 (at 500 kBit/s) 30 (at 1000 kBit/s)
Coding		Gray code or binary code
Passive mode (no clock output, listen only)		Not supported
Parity check		Not supported
Shunt signal		Depending on SSI encoder, e.g. change direction of rotation, set zero
Termination		Through connection of an internal termination resistor to prevent reflection with long sensor leads (> 10 m) or high baud rates

Specifications (PX460 continued)

Pulse-width modulated signals (PMW)		
Pulse-width modulated signals (PWM) Frequency Pulse width/duty ratio	 Hz %	 0.1 to 100, 000 5 to 95
General specifications (PX460)		
Internal sampling rate	MHz	98.3
Glitch filter time constant (adjustable)		0.82 ns, 1 µs, 10 µs, 100 µs
Permissible cable length between PMX460 and transducer	m	100
Measurement frequency range (-1 dB) at 38,400 Samples/s at 19,200 Samples/s	 kHz kHz	 0 ... 10 0 ... 5
Measurement frequency range (-3 dB) at 38,400 Samples/s at 19,200 Samples/s	 kHz kHz	 0 ... 17 0 ... 8.5
Active low-pass filter (Bessel/Butterworth, can be disabled) 6th order	Hz	0.1 to 6000, filter OFF
Frequency measurement deviation	%	< 0.01 of measured value
PWM deviation	%/kHz	0.3
Zero drift	% / 10 K	0
Full-scale drift	% / 10 K	< 0.01 of measured value
Input impedance RS485 inputs connectable termination resistor RS485 inputs AC input	 kΩ Ω kΩ	 > 45 125 > 100
SHUNT calibration signal output Level SHUNT active	 V	 typically U_{IN} -1 V at 50 mA
Quality certificate		
Calibration certificate		A PDF document of the measurement card calibration certificate as per ISO 10012 is stored in the PMX device memory and can be downloaded via the PMX browser.

Cut-off frequency (Hz) (-3 dB)		Runtime (ms)	
		Bessel	Butterworth
6000		0.07	0.94
5000		0.08	0.12
3000		0.10	0.14
2000		0.20	0.28
1000		0.42	0.61
500		0.86	1.23
200		2.00	3.10
100		4.15	6.17
50		8.45	12.5
20		21.4	30.7
10		39	47
5		74	91
2		174	216
1		340	430
0.5		680	840
0.2		1,680	2,090
0.1		3,360	4,200

Specifications

Input / Output

Analog output and digital input/output card		PX878
Transducer connection		4 x 7-pin plug terminals
Update rate of all output signals	kHz	19.2
Nominal (rated) temperature range	°C	0 to 50
Operating temperature range (no condensation allowed/module not immune to water condensation)	°C	-10 to +60
Storage temperature range	°C	-20 to +70
Rel. humidity at 31 ºC	%	5 to 95 (non-condensing)
Protection class (height up to 2000 m, degree of pollution 2)		III
Degree of protection		IP20 per EN60529
EMC requirements		as per EN 61326 and EN 55011 (Class B)
Electrical isolation		60 V DC voltage between plug-in card and supply
Analog outputs		
Accuracy class		0.1
Number		5
Signal sources		Real measurement signals and calculated signals
Nominal (rated) voltage (output)	V	± 10
D/A converter resolution	bits	16
Output rate, max.	kHz	19.2
Cut-off frequency (-3 dB)	kHz	3
Output resistance	Ω	< 10
Permissible load impedance		10 KΩ ‖ 20 nF
Noise (peak-to-peak)	mV	< 10
Reference signal (common)		for all 5 outputs
Non-linearity (INL) Integral Non Linearity	LSB	± 16
Crosstalk attenuation	dB	> 90
Zero drift rel. to full scale	mV / 10 K	10
Full-scale drift rel. to output scale	mV / 10 K	10
Cable length, max.	m	100
Digital inputs		
Number		8 signals per PX878 (max. two PX878 can be inserted)
Functions		Zero balance, tare, reset limit value, digital output, parameter set selection (bit-coded), calculation channel flags, CODESYS flags
Switching time	ms	1
Input signal range	V	0 to 30
Maximum permitted input level	V	30
Input low state	V	0 to 5 (or open)
Input high state	V	10 to 30
Input resistance (nominal)	kΩ	7.5
Cable length, max.	m	100
Cable type (required for disruptive interference)		shielded
Digital outputs		
Number		8 signals per PX878 (max. two PX878 can be inserted)
Functions		Measured value/system status, digital input, fieldbus flag, limit value switch, current parameter set number (bit-coded), flags, calculation channels, CODESYS flags
Switching time	ms	1
Input voltage (24 V nominal) U_{IN}	V	10 to 30
Output current per output, max.	mA	200
Output current (sum outputs), max.	A	1.6
Minimum voltage level when loaded with 200 mA		Typically U_{IN} − 0.7 V
Cable length, max.	m	100

Specifications

Qualitätsnachweis		
Kalibrierschein		Der Kalibrierschein der Messkarte nach ISO 10012 ist im Gerätespeicher des PMX als PDF-Dokument abgelegt und kann über den PMX-Browser heruntergeladen werden.

Communication cards

EtherCAT® fieldbus module[1]		PX01EC
Type		EtherCAT® complex slave
Data transport layer		Ethernet II, IEEE802.3
Power consumption, max.	W	2
Electrical isolation from mains		60 V DC voltage between plug-in card and supply
Cable type		Standard CAT-5, shielded
Cable length, max.	m	100
Connector socket		RJ45 (IN/OUT)
PMX to PLC communication		
Baud rate	Mbit/s	100
Update rate	KHz	1.2; 2.4; 4.8; 9.6
Slave synchronization (Distributed Clocks (DC))	-	No
Cyclic process input data, max. (Slave -> Master)	bytes	400
Cyclic process output data, max. (Slave -> Master)	bytes	200
CAN		COE (CAN over Ethernet)
PLC to PMX communication	Signals	max. 8 signals (REAL type). Can be used as CPU channels in calculated channels
Data transfer rate, max.	Hz	250 (adjustable)
Device description file		Included or can be created to match the device configuration using PMX web server

[1] EtherCAT® is a registered brand and patented technology, licensed by Beckhoff Automation GmbH, Germany

PROFINET-IO fieldbus module		PX01PN
Data transport layer		Ethernet II, IEEE802.3
Power consumption, max.	W	2.4
Electrical isolation from mains		60 V DC voltage between plug-in card and supply
Cable type		Standard CAT-5, shielded
Cable length, max.	m	100
Connector socket		RJ45 (port 1 / port 2)
PMX to PLC communication		
Baud rate	Mbit/s	100
Update rate	kHz	1
Slave synchronization		No
Cyclic process input data, max. (device -> controller)	bytes	400
Cyclic process output data, max. (controller -> device)	bytes	200
Minimum cycle time (with a max. of 28 signals)	ms	1
PLC to PMX communication	Signals	max. 8 signals (REAL type). Can be used as CPU channels in calculated channels
Data transfer rate, max.	Hz	250 (adjustable)

Specifications

Supported protocols		RTC (Real Time Cyclic) Class 1 unsynchronized Class 3 synchronized (IRT)
		RTA - Real Time Acyclic
		DCP - Discovery and Configuration
		CL-RPC - Connectionless Remote Procedure
		LLDP - Link Layer Discovery
		SNMP - Simple Network Management
		MRP client - Media Redundancy
Topology recognition		LLDP, SNMP, MIB2, physical device
VLAN and priority tagging (setting priorities)		Yes
Identification and maintenance		I&M0 ... I&M4 read and write
PROFINET fieldbus module		**PX01PN**
Unsupported protocols		RT via UDP
		Multicast communication
		DHCP
		Fast startup
		Media redundancy (except MRP client)
		Supervisor-AR (Supervisor-DA-AR **is** supported)
		Maximum one input CR and one output CR
Device description file		Included or can be created to match the device configuration using PMX web server

EtherNet/IP

EtherNet/IP fieldbus module		**PX01EP**
Type		Communication adapter
Power consumption, max.	W	2.3
Cable type		Standard CAT-5, shielded
Cable length, max.	m	100
Connector socket		RJ45 (Port 1 / Port 2)
Maximum number for input data	bytes	504 per assembly instance
Maximum number for output data	bytes	504 per assembly instance
IO connection types		Exclusive owner, Listen only, Input only
IO connection trigger types	ms	Cyclic, min 1 [1)] Application triggered, min. 1[1)] Change of state, min 1[1)]
Explicit messages		Connected and unconnected
Maximum number of connections		8 (total of connected explicit and implicit connections)
Unconnected Message Manager (UCMM)		supported
Objects		Identity (0x01) Message router (0x02) Assembly (0x04) Connection manager (0x06) DLR (0x47) QoS (0x48) TCP/IP interface (0xF5) Ethernet link (0xF6)
Kommunikation SPS zu PMX Übertragungsrate, max.	Signale Hz	8 Signale (Typ REAL) max., nutzbar als CPU-Kanäle in den Berechnungskanälen 250 (einstellbar)
DHCP		supported
BOOTP		supported
Baud rates	Mbit/s	10,100
Duplex modes		Half-duplex, Full-duplex, Auto-negotiation
Data transport layer		Ethernet II, IEEE802.3

Specifications

ACD		supported
DLR V2 (ring topology)		supported
Integrated switch		supported
Reset services		Type 0 supported
CIP Sync services		NOT supported
TAGs		NOT supported
Device description file		Included or can be created to match the device configuration using PMX web server

[1)] Depends on the number of connections and the number of I/O data.

Specifications

Signal runtimes (ms)

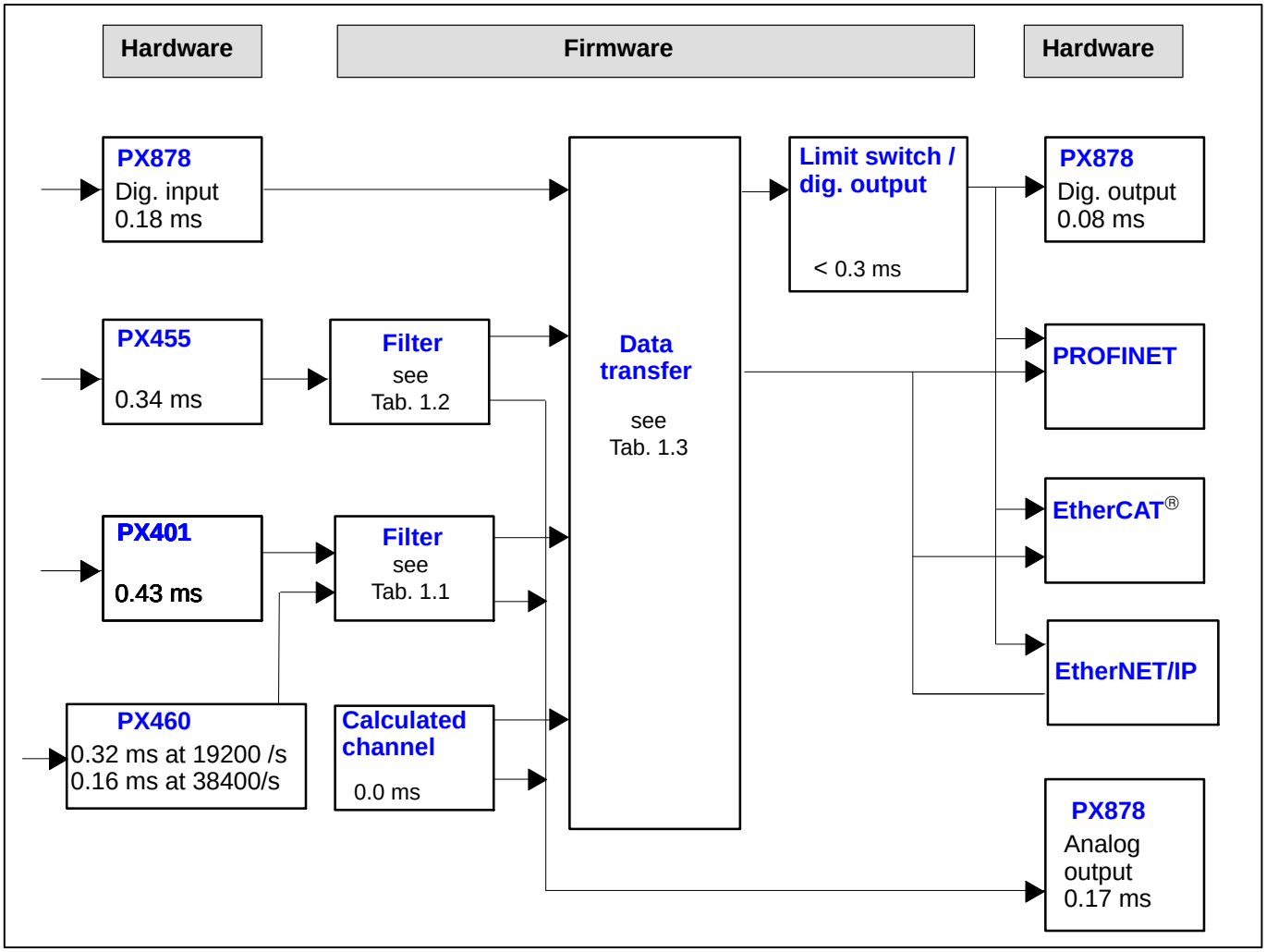

Cut-off frequency fc [Hz] (-3 dB)	Runtime [ms]	
	Bessel	Butterworth
6,000 *)	0.07	0.94
5,000 *)	0.08	0.12
3,000	0.10	0.14
2,000	0.20	0.28
1,000	0.42	0.61
500	0.86	1.23
200	2.00	3.10
100	4.15	6.17
50	8.45	12.5
20	21.4	30.7
10	39	47
5	74	91
2	174	216
1	340	430
0.5	680	840
0.2	1,680	2,090
0.1	3,360	4,200

Tab. 1.1: Runtimes for **PX401, PX460**

* for PX460 only

Cut-off frequency fc [Hz] (-3 dB)	Runtime [ms]	
	Bessel	Butterworth
2,000	0.16	0.23
1,000	0.42	0.60
500	0.85	1.24
200	2.00	3.10
100	4.15	6.17
50	8.45	12.5
20	21.4	30.7
10	39	47
5	74	91
2	174	216
1	340	430
0.5	680	840
0.2	1,680	2,090
0.1	3,360	4,200

Tab. 1.2: Runtimes for **PX455**

Data transfer rate [Hz]	minimum [ms]	typical [ms]	maximum [ms]
1,200	0.1	0.52	0.93
2400 (factory default)	0.1	0.31	0.52
4,800	0.1	0.21	0.31
9,600	0.1	0.16	0.21

Tab. 1.3: Data runtimes

Example:

Signal runtime of a sensor signal via the analog output with filter:

Signal path PX455 → 2 kHz Bessel→ PX878

0.34*) + 0.16 (Table 1.2) + 0.17*) ms = 0.67 ms

*) See diagram on page 17.

Delay until signal appears in cyclic data frame.

Protocol	Data copy rate [Hz]	typical [ms]	maximum [ms]
PROFINET	1200 (standard and max.)	1.8 + frame_cycle /2	2.4 + frame_cycle
EtherCAT	2400 (standard) 4800 9600 (max)*	1.0 + frame_cycle /2	1.5 + frame_cycle
EtherNET/IP	1200 (standard and max.)	1.8 + frame_cycle /2	2.4 + frame_cycle

Tab. 1.4: Fieldbus runtimes

“Data Copy Rate” is the time in which the data are copied to the fieldbus module in slot 0. frame_cycle is the rate of the cyclic data frame that is set by the bus configuration tool.

* The EtherCAT data copy rate only has minor effects on the signal runtime. This is 0.16 ms between copy rates of 2.4 and 9.6 kHz.

Example:

Signal runtime of a sensor signal via the EtherCAT fieldbus:

Signal path PX455 → 2 kHz Bessel → Data transfer @2.4 Hz → EtherCAT@2.4 kHz PX01EC

0.34*) + 0.16 (Table 1.2) + 0.31 ms + 1.2 ms = 2.00 ms (average signal runtime from input terminal to EtherCAT fieldbus

*) See diagram on page 17.

Specifications

Connections

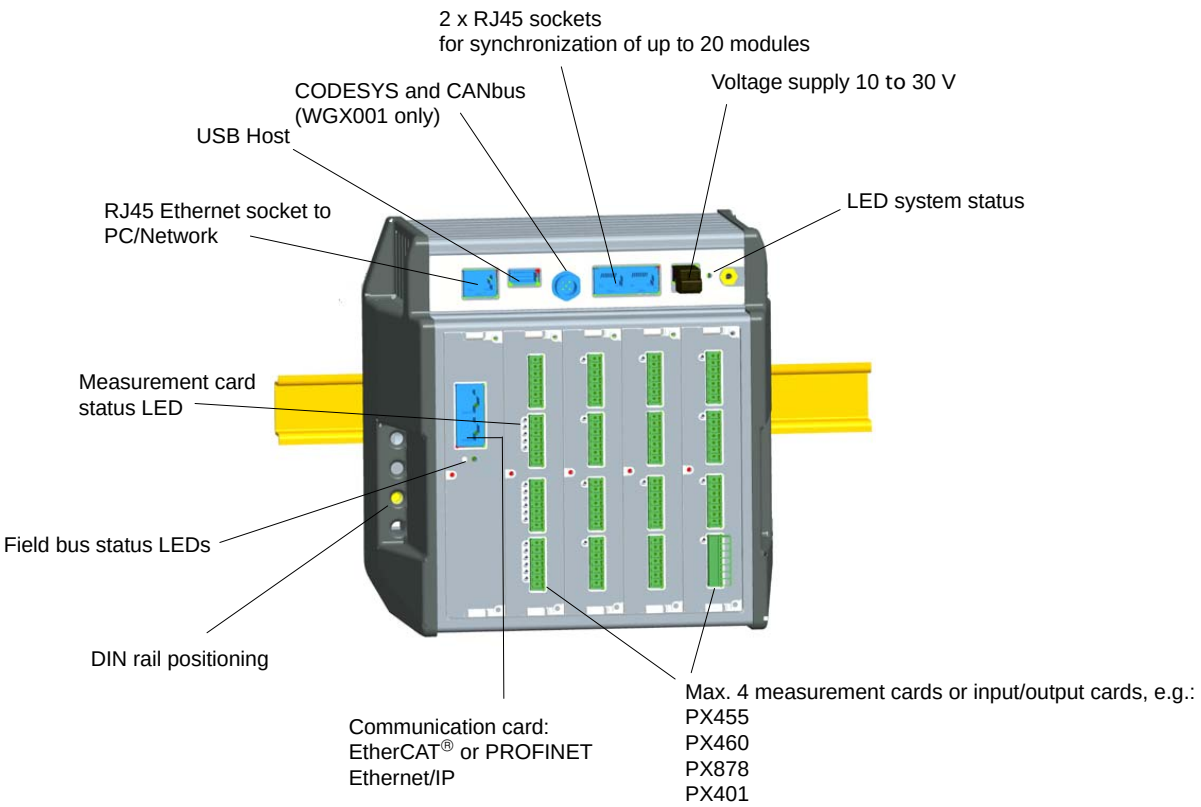

Combination options (WGX001 / WGX002)

	Slot 0	Slot 1	Slot 2	Slot 3	Slot 4	Number of plug-ins
Fieldbus or realtime Ethernet	x	–	–	–	–	0–1
PX401	–	x	x	x	x	0–4
PX455	–	x	x	x	x	0–4
PX460	–	x	x	x	x	0–4
PX878	–	x	x	–	–	0–2

Mounting / tool		
	Required tool	**Tightening torque**
Mount rail clip on DIN rail M 2.5 hexagon socket screw	Hexagon socket screwdriver, 2.5 a.f.	1.0 - 1.2 Nm
Mount support rail on housing M 5 hexagon socket screw	Hexagon socket screwdriver, 3 a.f.	5 Nm
Mount plug-in card M 2.5 Torx screws	TX8 Torx screwdriver	0.5 - 0.6 Nm
Mounting wall bracket M 4 hexagon socket screw	Hexagon socket screwdriver, 3 a.f.	3 Nm
Mount side plates M3 Torx screw	Torx-Schraubendreher TX10	0,8 - 1 Nm

Specifications

Mounting and mounting dimensions

Support rail clips(included in scope of supply)

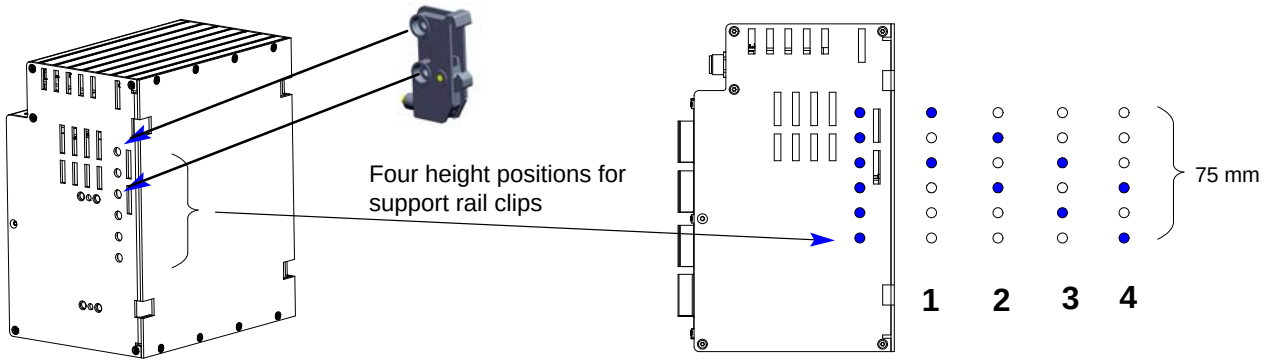

Basic device, **WGX001 / WGX002** for max. 5 plug-in cards

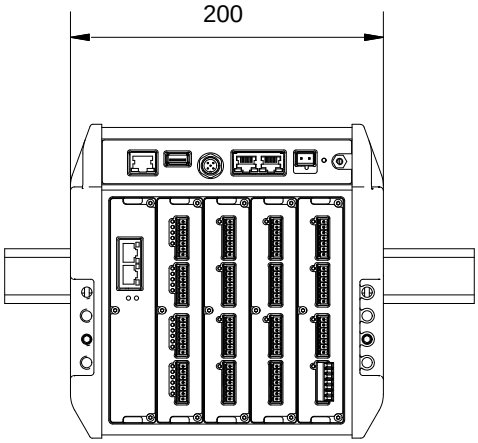

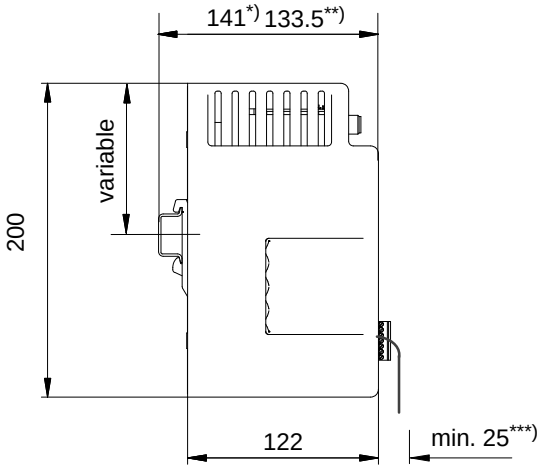

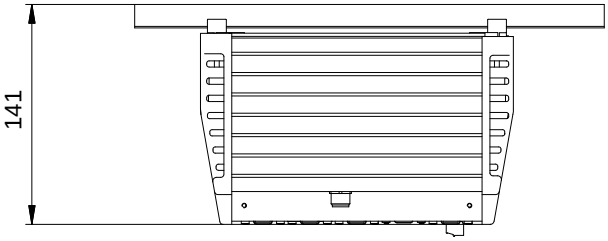

*) Height of support rail 15 mm

**) Height of support rail 7.5 mm

***) Min. dimension: plug plus sensor cable

NOTE:

To ensure sufficient ventilation/cooling, a 2 cm gap must be maintained above and below neighboring devices.

Specifications

Mounting and mounting dimensions

Wall mountings (included in scope of supply)

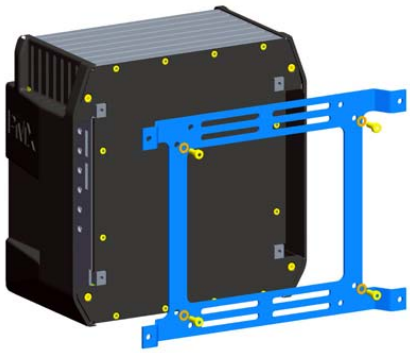

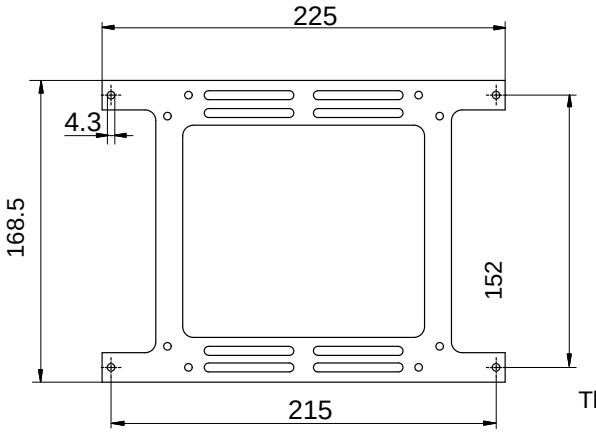

The wall mountings can also be fitted turned through 90º.

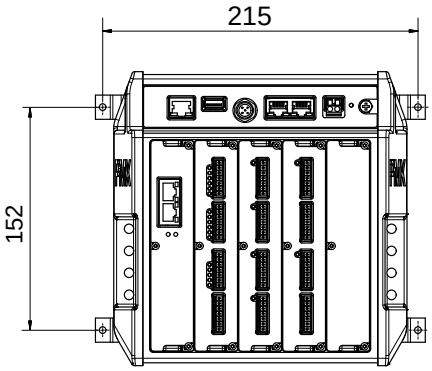

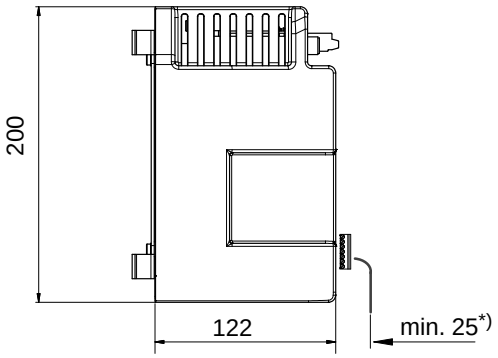

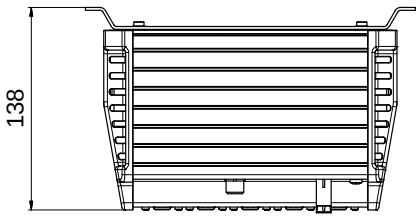

*) Min. dimension: plug plus sensor cable

NOTE:

To ensure sufficient ventilation/cooling, a 2 cm gap must be maintained above and below neighboring devices.

Installing cable fastening plates (included in the scope of supply)

To ensure that cables running from and to the PMX are fastened securely and reliably, an optional plate can be secured to the top and bottom of the PMX mainframe to fasten the cables.

Holes in the plate can be used to fasten the cables using cable ties.

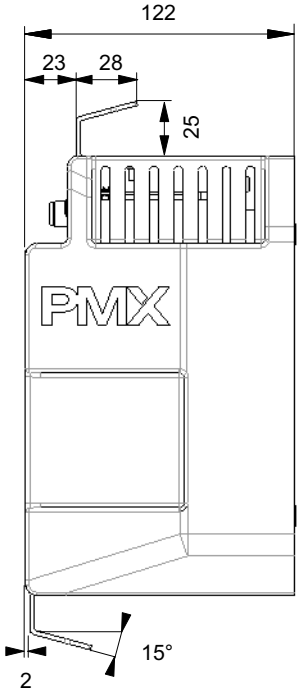

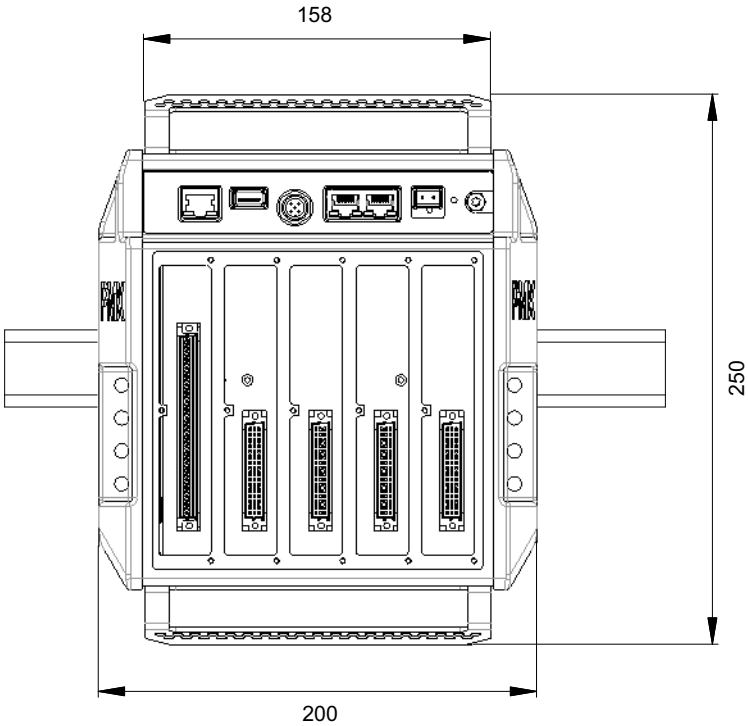

Specifications (continued)

Accessories and replacement parts

Accessories	Order number
Ethernet crossover cable for direction operation of devices on a PC or notebook, length 2 m, type CAT5+	1-KAB239-2
AC/DC power supply unit; Input: 90 V to 264 V AC, 1.5 m cable, Output: 24 V DC, max. 1.25 A, 2 m cable with ODU plug	1-NTX001
Replacement parts	**Order number**
PX01, PMX blank plate for plug-in card slot Slot 0	1-PX01
PX02, PMX blank plate for plug-in card slot Slots 1-4	1-PX02
RAILCLIP, PMX DIN rail mounting set (2 pieces), incl. screws	1-RAILCLIP
Phoenix plug terminals	
Set of plug terminals (push-in) for PMX plug-in cards (4 x 7-pin, incl. coding plug and labeling sheets)	1-CON-S1008
Set of screw terminals for PMX plug-in cards (4 x 7-pin, incl. coding plug and labeling sheets)	1-CON-S1009
Screw terminal set for PMX voltage supply (1 x 2-pin, incl. coding plug and labeling sheets)	1-CON-S1010
Set of plug terminals (push-in) for PMX plug-in cards (2 each 13 and 2-pin, incl. coding plug and labeling sheets)	1-CON-S1012
M12x1 mating connector for CAN interface (WGX001)	1-CON-S1002

In general, the mating connectors are always included for all plug-in cards (PX401, PX455, PX460 and PX878).

When ordering a PMX basic device, the delivery always includes DIN rail mounting, wall mounting elements and mating connector.

Specifications NTX001 power supply

NTX001		
Nominal (rated) input voltage (AC)	V	100 to 240 (± 10%)
No-load power consumption at 230 V	W	0.5
Nominal (rated) loading		
U_A	V	24
I_A	A	1.25
Static output data		
U_A	V	24 ± 4%
I_A	A	0 - 1.25
U_{Br} (output ripple voltage; peak-to-peak)	mV	≤ 120
Current limiter, typically from	A	1.6
Isolation primary - secondary		electrical, by optical coupler and converter
Creepage and clearance distances	mm	≥ 8
High-voltage test	kV	≥ 4
Ambient temperature	°C	0 to +40
Storage temperature	°C	-40 to +70

Software for PMX

Web server	
Web server	Integrated web server for full parameterization and operation of the PMX with integrated password protection
User level	3-phase (Worker, Service, Administrator), Level 2 (Service) can be configured
System requirements for the web browser	Internet Explorer (IE) 9.0 or higher, FireFox or Google Crome

PC software	Order number
Software catman®Easy	1-CATMAN-EASY
Software catman®AP	1-CATMAN-AP
Software Evidas	1-Evidas, 1-Evidas-FN

Software driver	
PMX .NET / COM API	Function library for integrating PMX amplifiers in their own development environments under Microsoft .NET and ActiveX
LabView driver [1)]	Universal driver for integrating PMX amplifiers in LabView (as from LabView 2012)
DIAdem driver [1)]	Universal driver for integrating PMX amplifiers into DIAdem DAQ software (for 32-bit DIAdem versions as from Version 10.1)

[1)] LABView and DIAdem are registered trademarks of the National Instruments Corporation

NOTE:

Individual trial versions of the software packages can be downloaded free of charge from the HBM website. They include detailed assistance and program examples for you to run.
https://www.hbm.com/en/1256/software-and-firmware-downloads-for-industrial-amplifiers/

Subject to modifications.
All product descriptions are for general information only. They are not to be understood as a guarantee of quality or durability.

托驰（上海）工业传感器有限公司
上海市嘉定区华江路348号1号楼707室
电话：+86 021 51069888
传真：+86 021 51069009
邮箱：zhang@yanatoo.com
网址：www.sensor-hbm.com