Mounting instructions

Torque Flange

T10F

A0608-13.1 en

Contents **Page**

Safety instructions **5**

1 Versions of the torque flange **9**

2 Application **10**

3 Design and function **11**

4 Mechanical installation **12**
4.1 Conditions at the site of installation 13
4.2 Mounting position 13
4.3 Installation options 14
4.3.1 Installation with complete antenna ring 14
4.3.2 Installation with subsequent stator mounting 15
4.3.3 Installation example with couplings 16
4.3.4 Installation example with cardan shaft 16
4.4 Installing the rotor 17
4.5 Installing the stator B 20
4.6 Clamping piece assembly 22
4.7 Installing the slotted disc (speed measuring system) 24
4.8 Aligning the stator (speed measuring system) 25

5 Electrical connection **27**
5.1 General instructions 27
5.2 Shielding design 27
5.3 Option 2, code KF1 28
5.3.1 Adapting to the cable length 28
5.4 Option 2, code SF1/SU2 30
5.5 Supply voltage 32

6 Calibration **33**
6.1 Calibration option 2, code KF1 33
6.2 Calibration option 2, code SF1/SU2 33

7 Settings **34**
7.1 Torque output signal, code KF1 35
7.2 Torque output signal, code SF1/SU2 35
7.3 Setting up zero point 35
7.4 Functional testing 36
7.4.1 Power transmission 36
7.4.2 Aligning the speed module 37

7.5 Setting up the number of pulses 38
7.6 Oscillation suppression (hysteresis) 39
7.7 Form of the speed output signal 39
7.8 Type of rotation speed output signal 40

8 Loading capacity 41
8.1 Measuring dynamic torques 41

9 Maintenance 43
9.1 Maintenance of the speed module 43

10 Dimensions 44
10.1 Rotor dimensions 44
10.2 Dimensions stator B 45
10.3 Mounting dimensions 46

11 Order numbers, accessories 47

12 Specifications 48

13 Supplementary technical information 59
13.1 Output signals 59
13.1.1 Output MD for torque (connector 1) 59
13.1.2 Output N for rotation speed (connector 2) 60
13.1.3 Output for rotation speed, double frequency, static signal for direction of rotation 61
13.2 Circular run–out values 62
13.3 Additional mechanical data 62

Safety instructions

Appropriate use

The T10F Torque Flanges may be used for torque-measurement and directly related control and regulation tasks only. Any other use is **not** appropriate.

To ensure safe operation, the transducers may only be used according to the specifications given in this manual. When using the transducers, the legal and safety regulations for the respective application must also be observed. The same applies if accessories are used.

The transducers is not a safety device in accordance with the regulations for appropriate use. For correct and safe operation of these transducers it is essential to ensure technically correct transportation, storage, installation and fitting, and to operate all equipment with care.

General dangers in the case of non–observance of the safety instructions

The transducers comply with the state of the art and is operationally reliable. If the transducers are used and operated inappropriately by untrained personnel, residual dangers may arise.

Anyone responsible for installing, operating, maintaining or repairing these transducers must be sure to have read and understood the operating manual and in particular the notes on safety.

Residual dangers

The scope of performance and supply of these transducers covers only part of the torque measurement technology. In addition, those involved in planning, constructing and operating the safety engineering aspects of torque measurement technology must design, produce and take responsibility for such measures in order to minimize potential residual dangers. Prevailing regulations must be complied with at all times. There must be a clear reference to the residual dangers connected with measurement technology.

In this manual, the following symbols are used to refer to residual dangers:

Symbol: **DANGER**

Meaning: **Maximum danger level**

Warns of an **imminently** dangerous situation in which failure to comply with safety requirements **will result in** death or serious physical injury.

Symbol: **WARNING**

Meaning: **Dangerous situation**

Warns of a **potentially** dangerous situation in which failure to comply with safety requirements **can result in** death or serious physical injury.

Symbol: **CAUTION**

Meaning: **Potentially dangerous situation**

Warns of a potentially dangerous situation in which failure to comply with safety requirements **could result in** damage to property or some form of physical injury.

Symbols for using advices and helpful information:

Symbol: **NOTE**

Points out that important information about the product or its handling is being given.

Symbol: CE

Meaning: **CE mark**

The CE mark enables the manufacturer to guarantee that the product complies with the requirements of the relevant EC directives (the declaration of conformity is available at http://www.hbm.com/HBMdoc).

Symbol:

Meaning: **Statutory marking requirements for waste disposal**

National and local regulations regarding the protection of the environment and recycling of raw materials require old equipment to be separated from regular domestic waste for disposal.

For more detailed information on disposal, please contact the local authorities or the dealer from whom you purchased the product.

Reconstruction and modifications

HBM's express consent is required for modifications affecting the transducers' construction and safety. HBM does not take responsibility for damage resulting from unauthorized modifications.

Qualified personnel

The transducers may be used by qualified personnel only; the technical data and the special safety regulations must be observed in all cases. When using the transducers, the legal and safety regulations for the respective application must also be observed. The same applies if accessories are used.

Qualified personnel means: personnel familiar with the installation, fitting, start–up and operation of the product, and trained according to their job.

Prevention of accidents

According to prevailing accident prevention regulations, after fitting the T10F torque transducers a cover must be fitted as follows:

- The cover must not be able rotate.
- The cover shall protect against crushing or cutting and provide protection against parts that might come loose.
- The cover shall be installed at a safe distance from moving parts or shall prevent anyone putting their hand inside.
- The cover shall even be fitted if the moving parts are installed in areas to which persons do not usually have access.

The above regulations may only be disregarded if machine parts are already sufficiently protected owing to the design of the machine or because other precautions have been taken.

Guarantee

In the event of a claim, the guarantee can only be considered if the torque flanges are returned in its original packing.

1 Versions of the torque flange

In the case of option 2 “Electrical Configuration”, the T10F torque flange is available in versions KF1, SF1 and SU2. These versions differ in their electrical inputs and outputs to the stator. The rotors are the same for all measuring range versions. Versions SF1 and SU2 can be optionally fitted with a speed measuring system.

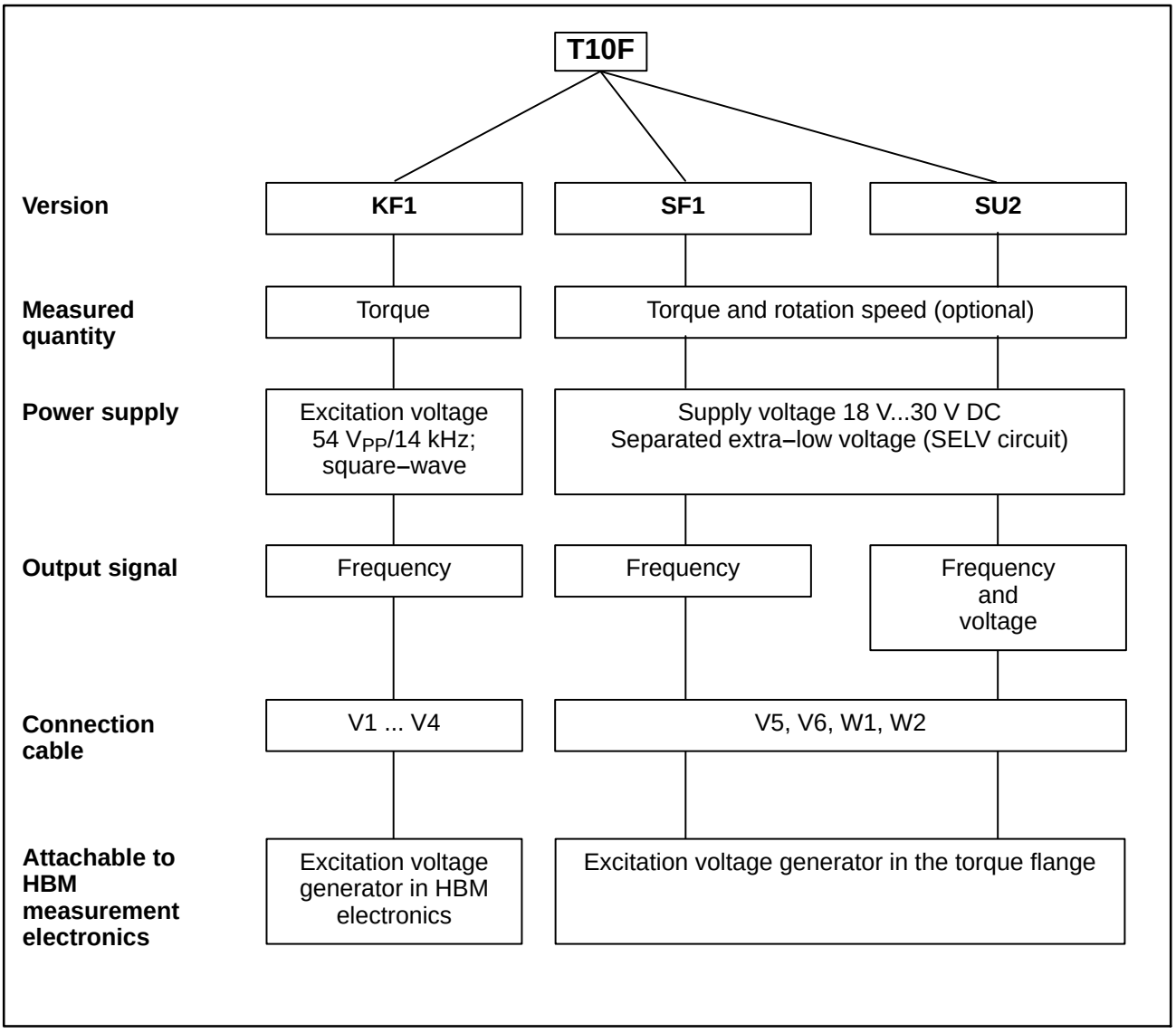

Fig. 1.1: T10F versions

You can see which version you have from the stator identification plate. The version is shown by its “T10F–...” number.

For example: T10F–001R–**SU2**–S–0–V1–Y (see also page 47).

2 Application

T10F Torque Flanges acquire static and dynamic torque data from static or rotating shafts and determine rotation speed together with information on the direction of rotation. Due to their extremely short design they enable very compact test arrangements to be used. They offer a very wide range of applications.

In addition to conventional test-rig applications (motor, roller and gear test-rigs) new solutions are possible for torque measurements partly integrated into the machines. Here you benefit from the special characteristics of the T10F Torque Flange:

- Extremely short design due to flange measuring–body
- High permissible dynamic loads
- High permissible transverse forces and bending moments
- Very high torsional stiffness
- No bearings, no slip-rings

Due to their construction without bearings and the contact–free transmission of excitation voltage and measurement, torque flanges are maintenance–free. Thus, frictional or thermal effects on the bearings can be excluded.

The torque flanges are supplied for nominal (rated) torques from 50 N·m up to 10 kN·m. Depending on the nominal torque, maximum speeds of up to 15,000 rpm are permissible.

T10F Torque Flanges are protected from electromagnetic interference. They have been tested with regard to EMC according to the relevant European standards, and carry the CE mark.

3 Design and function

Torque flanges consist of two separate parts: the rotor and the stator. The rotor includes the measuring body and the adapter flange.

Strain gauges have been mounted on the measuring body. The rotor electronics for transmitting the bridge excitation voltage and measuring signal are located centrally on the flange. The top surface of the measuring body supports the transmitter coils for contact–free transmission of excitation voltage and measuring signal. The signals are transmitted and received by a divisible antenna ring. The antenna ring is mounted on a housing that includes the electronic system for voltage adaption and signal conditioning.

The stator includes connecting plugs for the torque signal, the power supply and the rotation speed signal (optional). The antenna ring should be mounted concentrically around the rotor (see chapter 4).

In the case of the option which includes a rotation speed measurement system, the rotation speed sensor is mounted on the stator and the customer fastens the associated slotted disc to the rotor. Rotation speed is measured optically in accordance with the principle of infrared transmitted light barriers.

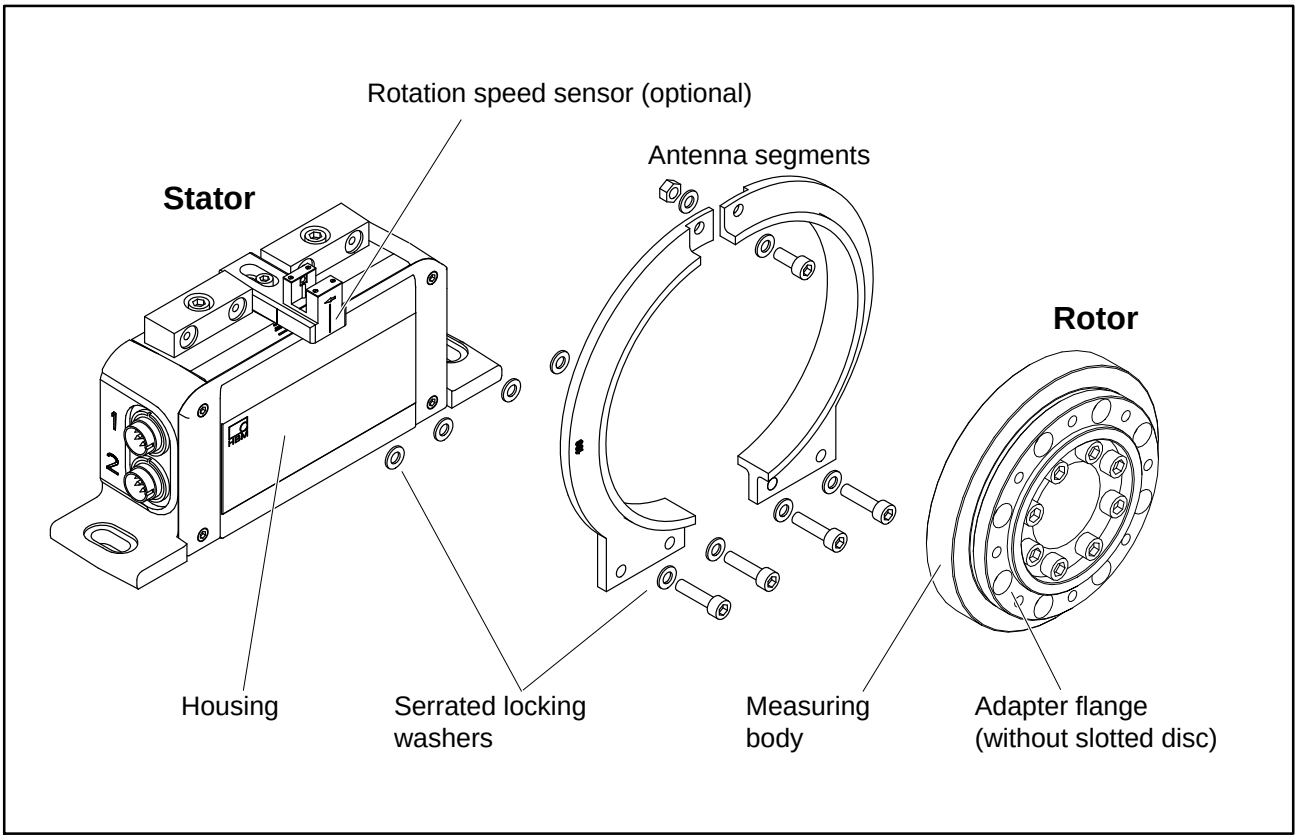

Fig. 3.1: Mechanical construction, exploded view

4 Mechanical installation

WARNING

Handle the torque flange carefully. The transducer might suffer permanent damage from mechanical shock (dropping), chemical effects (e.g. acids, solvents) or thermal effects (hot air, steam).

Never slacken the screwed rotor joints marked with sealing varnish (the hexagon-socket screws for the measuring body and adapter flange and the slotted screws on the type plate).

With alternating loads, you should use a screw locking device (medium) to glue the rotor connection-screws into the counter thread in order to prevent slackening and loss of pre–tensioning.

T10F Torque Flanges can be fitted directly to an appropriate shaft flange. The adapter flange enables direct mounting of a cardan shaft or corresponding corrector elements (if necessary, via an intermediate flange). Never exceed the permissible limits specified for bending moments or for transverse and longitudinal forces. Due to the high torsional stiffness of the T10F torque flange, dynamic changes on the shaft run are minimized.

CAUTION

In all cases check the effect on critical speeds and natural torsional vibrations to avoid overloading the torque flanges due to resonance step-up.

NOTE

For regular operation observe the mounting dimensions in all cases (see page 46) .

Even if the transducer has been mounted correctly, the zero point balanced at the factory might be offset by about ±150 Hz. If this value has been exceeded, we recommend to examine the mounting situation.

4.1 Conditions at the site of installation

T10F Torque Flanges are protected to IP54 according to EN 60 529. The measuring flanges must be protected from dirt, dust, oil, solvents and humidity. During operation, the prevailing safety regulations for the security of personnel must be observed (see ”Notes on safety”).

The output signal and zero point of the T10F Torque Flange are compensated for the effects of temperature variations between wide limits (see Technical Data on page 48). This compensation is carried out by costly stove-processes at static temperatures. This ensures that reproducible relationships are present and that the characteristics of the transducers can be duplicated at any time.

If static temperature relationships do not prevail, e.g. due to temperature differences between the measuring element and the adapter flange, the values specified in the technical data can be exceeded. Then for accurate measurements, static temperature relationships must be obtained by cooling or heating depending on the application. Alternatively, temperature decoupling must be checked, e.g. by heat radiating elements such as laminated couplings.

4.2 Mounting position

The torque flange can be mounted in any position. With clockwise torque, the output frequency is 10...15 kHz. With HBM amplifiers or with the “Voltage output” option, a positive output Signal (0...+10 V) is present.

In the speed measuring system, an arrow on the sensor head clearly indicates the direction of rotation. When the torque flange rotates in the direction of the arrow, connected HBM amplifiers deliver a positive output signal (0...+10 V).

4.3 Installation options

In principle, there are two options for torque-flange mounting: with antenna ring complete or disassembled. We recommend fitting in accordance with chapter 4.3.1. If it is not possible to install in accordance with 4.3.1 (for example during a subsequent stator change, or when installing with the speed measuring system), you must dismantle the antenna ring. At this point please be sure to follow the instructions for assembling the antenna segments (see ”Installing the stator” and “Installing the slotted disc”).

4.3.1 Installation with complete antenna ring

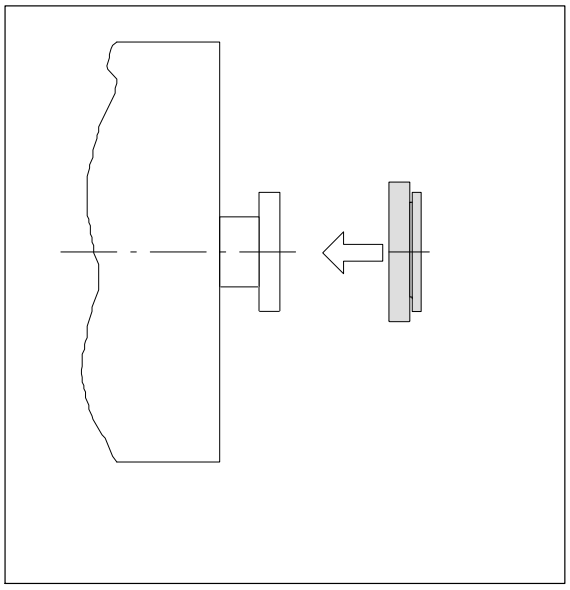

1. Install rotor

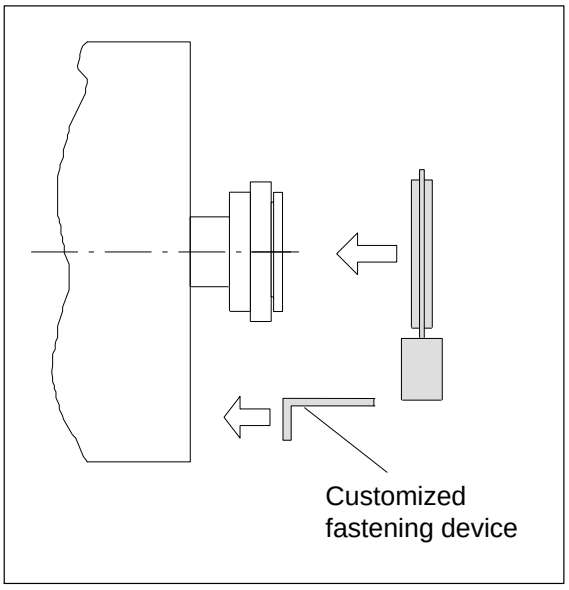

2. Install stator

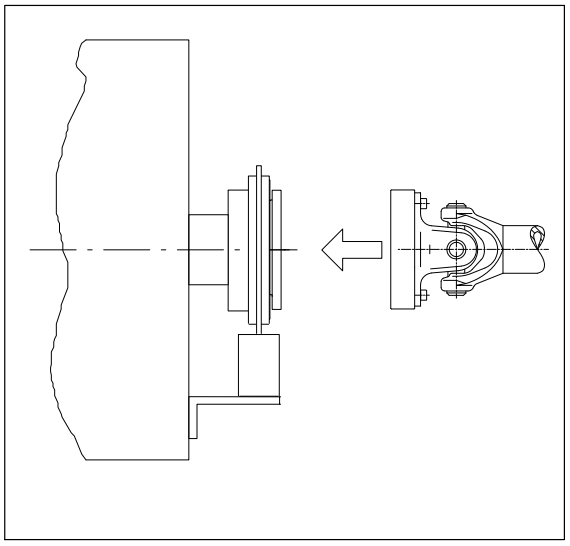

3. Finish installation of shaft run

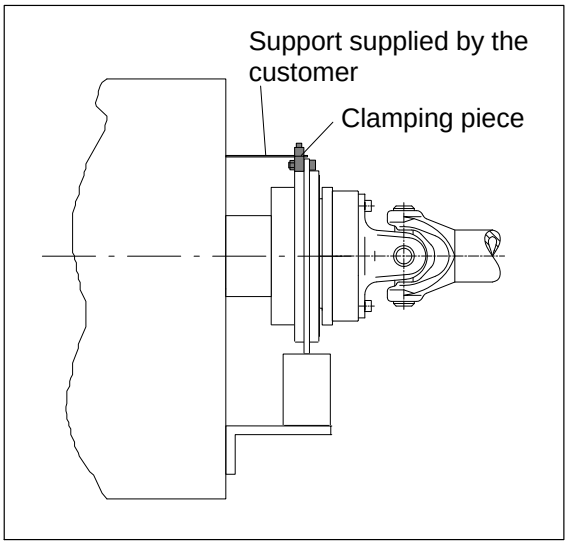

4. Install the clamping piece if required.

4.3.2 Installation with subsequent stator mounting

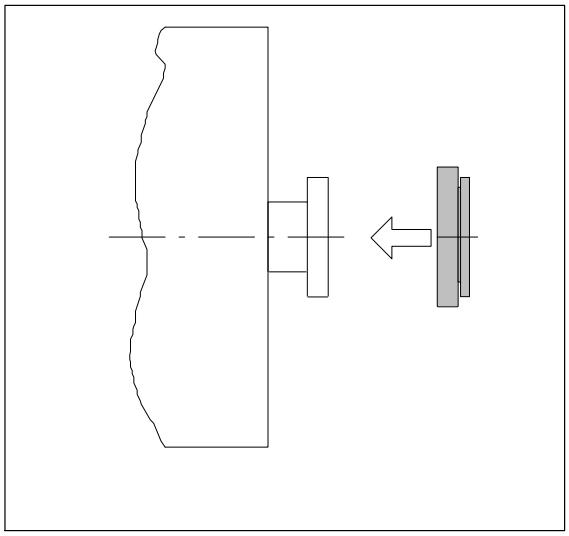

1. Install rotor

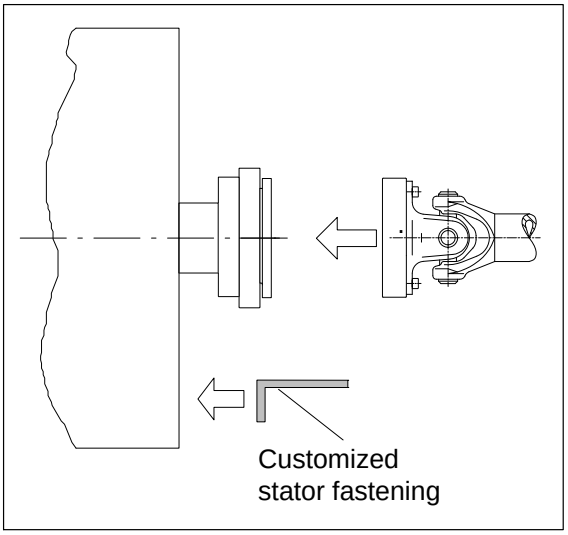

2. Install shaft run

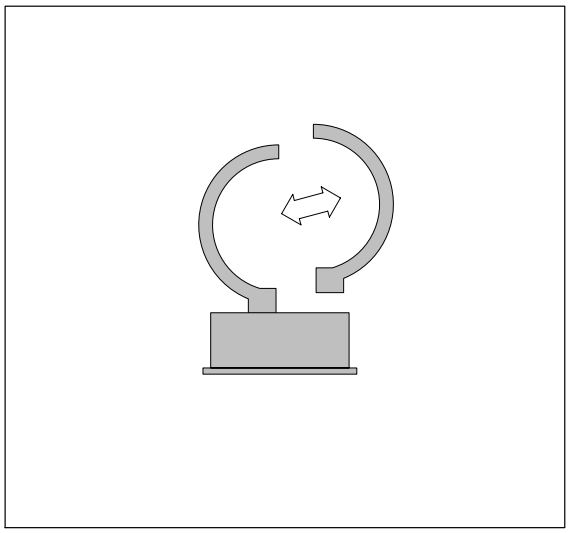

3. Dismantle one antenna segment

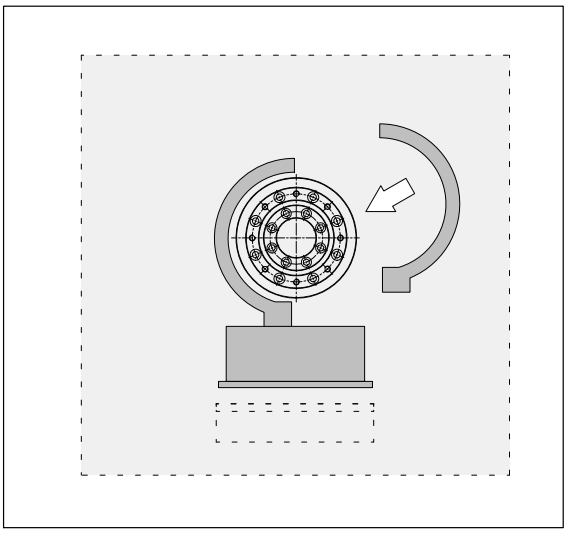

4. Install antenna segment around shaft run

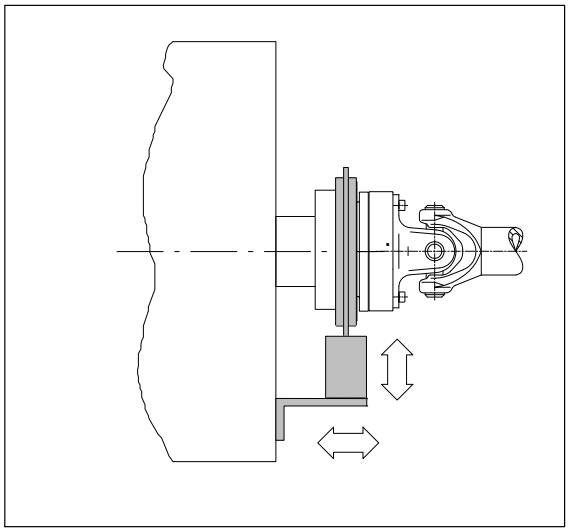

5. Align stator and finish installation

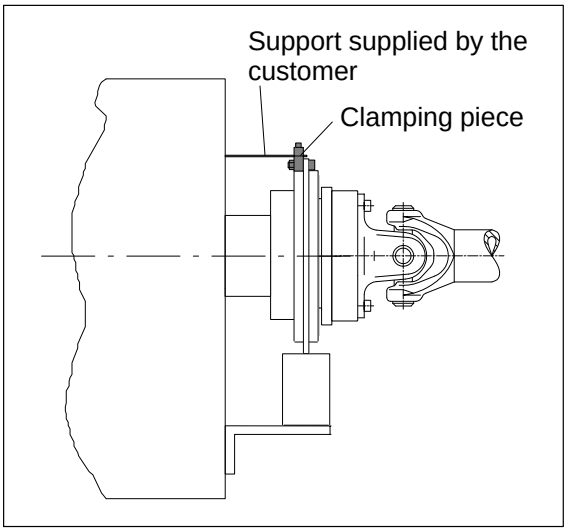

6. Install the clamping piece if required

4.3.3 Installation example with couplings

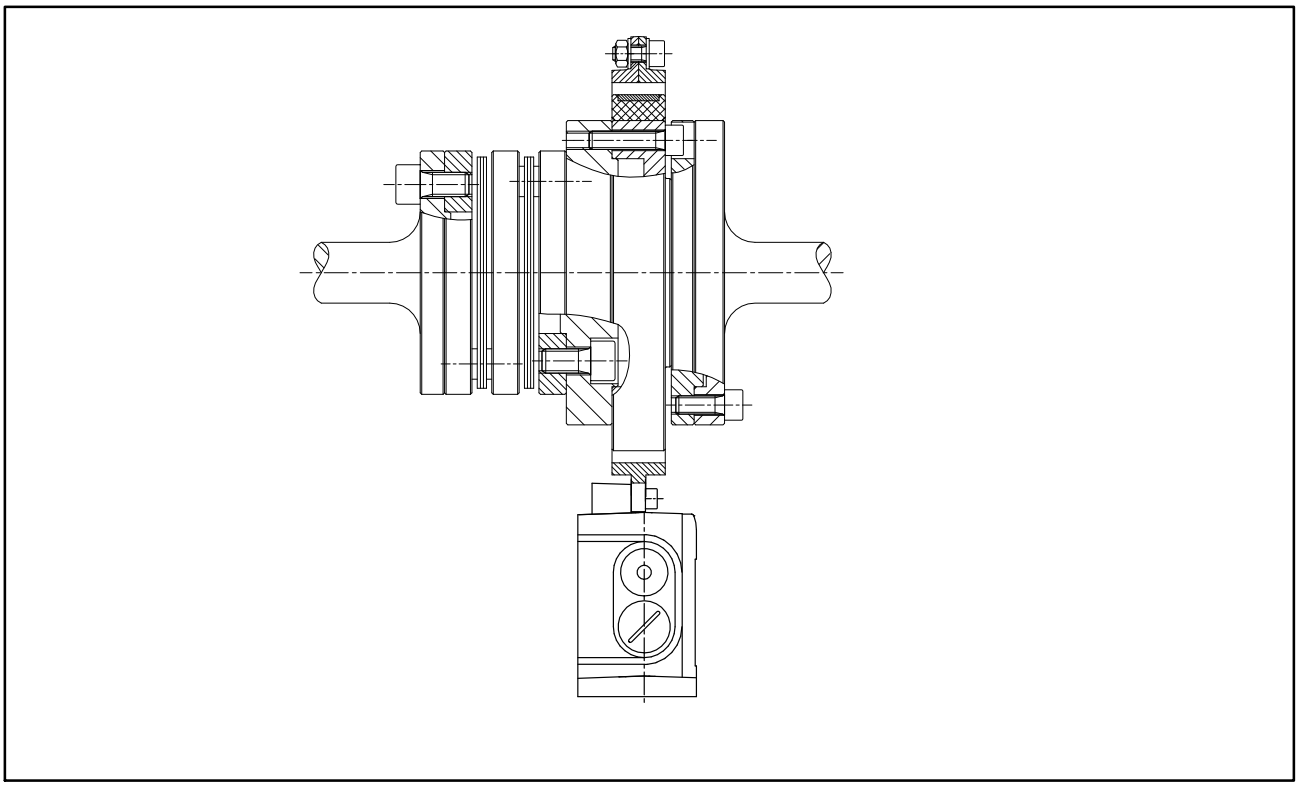

Fig. 4.1: Installation example with coupling

4.3.4 Installation example with cardan shaft

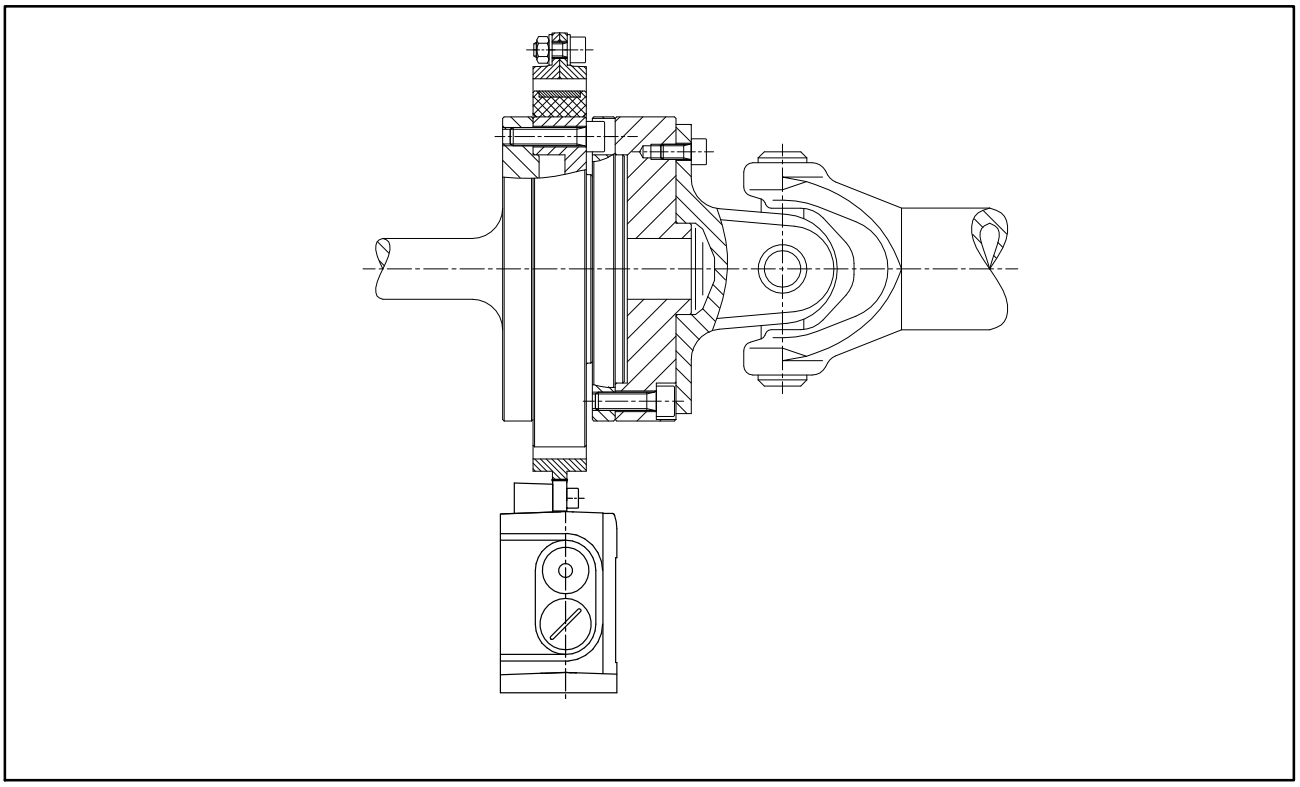

Fig. 4.2: Installation example with cardan shaft

4.4 Installing the rotor

CAUTION

For regular operation observe the mounting dimensions in all cases (in particular area of metal parts, see page 46) .

Additional mounting instructions for the speed measuring system can be found in chapter 4.7, page 24.

NOTE

In general, the rotor type-plate will no longer be visible after installation. Therefore, additional adhesive labels including the major characteristics have been supplied. They can be fixed on the stator or other relevant test-rig components thus enabling required data such as e.g. the calibration signal to be read off at any time.

1. Prior to installation, clean the plan surfaces on the torque flange and counter flange. For safe torque transmission, the surfaces must be clean and free from grease. Use a piece of cloth or paper soaked with a solvent. Make sure that no solvent drips into the torque flange's interior and that the transmitter coils do not suffer damage.

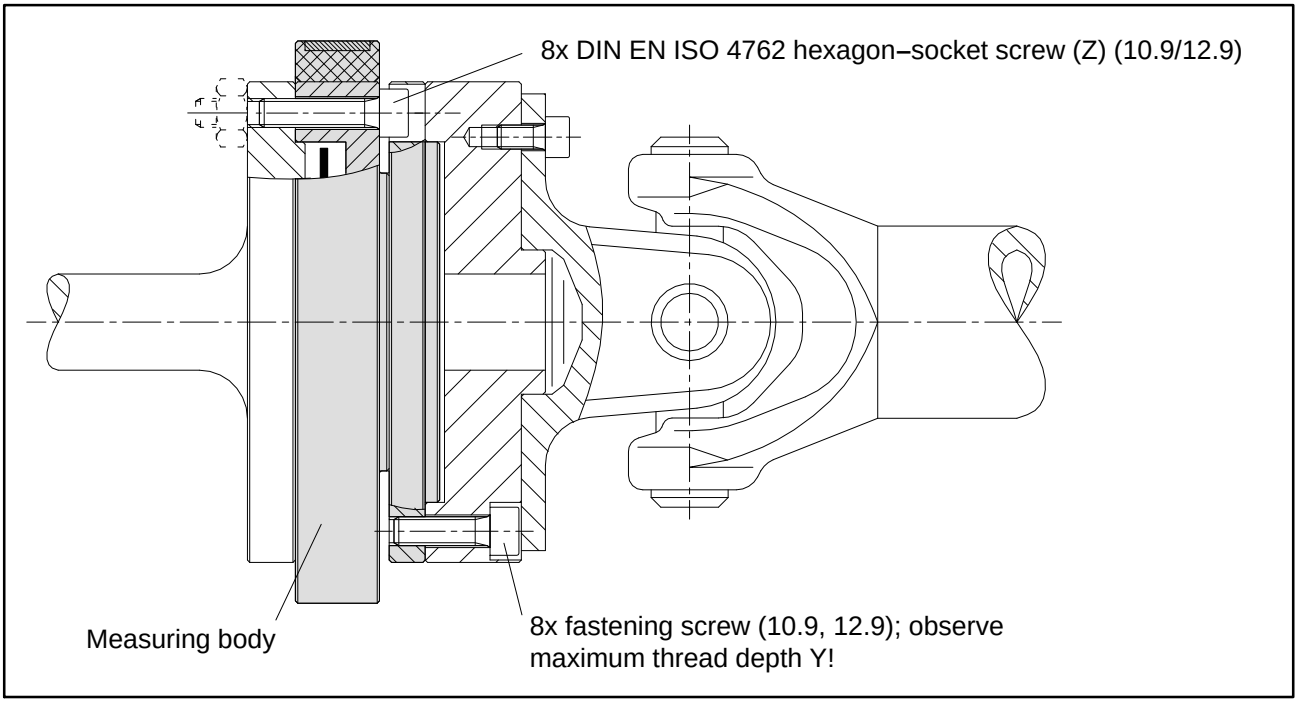

Fig. 4.3: Rotor screwed connection

2. To screw–fasten the measuring body use eight **DIN EN ISO 4762 hexagon–socket screws, property class 10.9 (measuring range 10 kN·m: 12.9)**, of the appropriate length (depending on the connection geometry, see Table 4.4).

   We recommend, particularly for 50 N·m, 100 N·m and 200 N·m situations, fillister-head screws DIN EN ISO 4762 or similar, blackened, smooth-headed, permitted size and shape variance in accordance with DIN ISO 4759, Part 1, product class A.

WARNING

The screw heads (Z), see Fig. 4.3, must not fit tight to the adapter flange.

With alternating load: Use a screw locking device (e.g. LOCTITE no. 242) to glue the screws into the counter thread in order to prevent slackening and loss of pre–tensioning.

3. Before finally tightening the screws, turn the torque flange on the centering until all screw heads are located more or less centrally in the clearance bores on the connection element. The screw heads may in no case be in contact with the sides of the adapter-flange clearance-bores.

4. Fasten all screws with the specified fastening torque (Table 4.4).

5. For further installation of the shaft run, there are eight threaded bores on the adapter flange. Also use screws of property class 10.9 (or 12.9) and fasten with the fastening torque specified in Table 4.4.

CAUTION

With alternating loads, use screw locking device to glue into place the connection screws. Guard against contamination from varnish fragments.

Always observe the maximum thread reach specified in Table 4.4. Otherwise, considerable measurement errors might occur or the transducer might suffer damage.

Nominal (rated) torque (N·m)	Fastening screws (Z)[1]	Fastening screws class	Maximum thread depth (Y) of screws in adapter flange (mm)	Prescribed fastening torque (N·m)
50	M6	10.9	7.5[2]	14
100				
200	M8		11	34
500	M12		18	115
1 k	M12		18	115
2 k	M14		18	185
3 k	M14		26	185
5 k	M18	10.9	33.5	400
10 k	M18	12.9[3]	33.5	470

Table 4.4: Fastening screws

1) DIN EN ISO 4762; black/oiled/μ_{tot}=0.125

2) With optional speed module 14 mm; due to intermediate flange 6 mm longer screws must be used.

3) If screws of Class 12.9 are not available, Class 10.9 screws (400 Nm N·m tightening torque) can be used. The permitted limiting torque is then reduced to 120 % by reference to M_{nom}.

4.5 Installing the stator B

On delivery, the stator is installed and ready for operation. The antenna segments can be separated from the stator, for example, for maintenance or to facilitate stator installation. In order not to alter the central alignment of the segment rings in relation to the stator foot, we recommend you remove only one antenna segment from the stator.

If your application does not require stator disassembly, proceed as described in sections 2., 6., 7. and 8.

Version with speed measuring system

Since the rotation speed sensor surrounds the slotted disc, it is not possible to slide the stator axially over the ready–fitted rotor (except for the 50 N·m, 100 N·m and 200 N·m ranges). Please also note chapter 4.7 on this point.

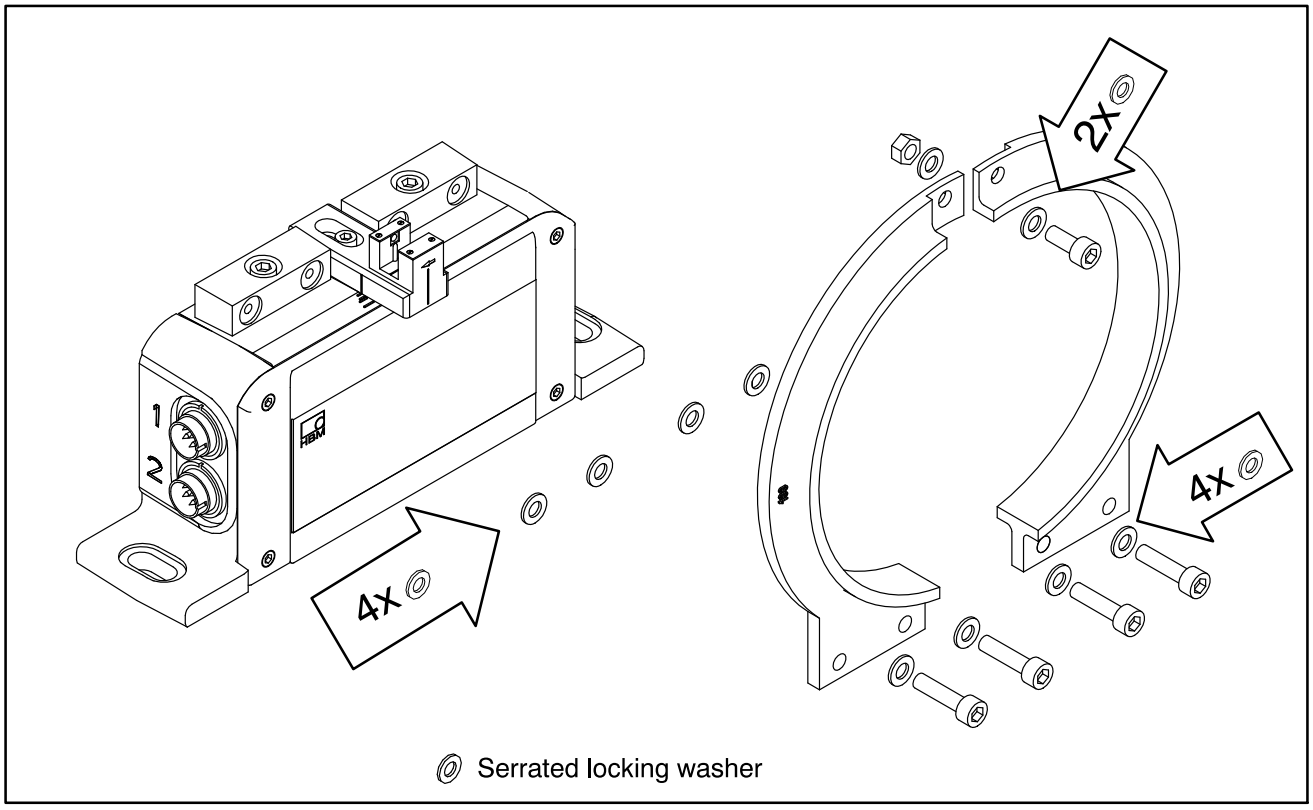

Fig. 4.5: Antenna-segment screwed connections

1. Slacken and remove the screwed connections (M5) on one antenna segment. Make sure that the serrated locking washers are not lost.
2. Use an appropriate foundation plate to install the stator housing in the shaft run, in such a way that it is still possible to make horizontal and vertical adjustments. Do not fully tighten the screws yet.
3. Now refit the antenna segment removed under point 1. onto the stator using two hexagon–socket screws and the serrated locking washers. Make sure that for a defined transition resistance all required serrated locking

washers (see Fig. 4.5), are located under the nuts. Do not fully tighten the screws yet.

4. Fit the upper screws for connecting the two antenna segments so that the antenna ring is closed. Remember the serrated locking washers in this case, too.

5. Now, fasten all antenna-segment screwed connections with a tightening torque of 5 N·m.

6. Align the antenna and rotor so that the antenna encloses the rotor more or less coaxially. Please adhere to the permitted alignment tolerances specified in the technical data.

7. Fasten the stator-housing screwed connection.

8. Make sure that the opening in the lower antenna-segment section is free from electroconductive foreign substances.

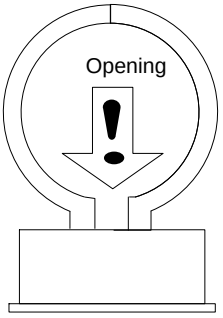

CAUTION

In order to ensure proper functioning, the serrated locking washers (A5.3–FST DIN 6798 ZN/galvanized) must be renewed after the antenna screws have been loosened three times.

4.6 Clamping piece assembly

Depending on the operating conditions, the antenna ring may be excited so that it vibrates. This effect is dependent on

- the speed
- the antenna diameter (depends in turn on the measurement range)
- the construction of the machine foundations

To avoid vibrations, a clamping piece is enclosed with the torque measurement flange enabling the antenna ring to be supported.

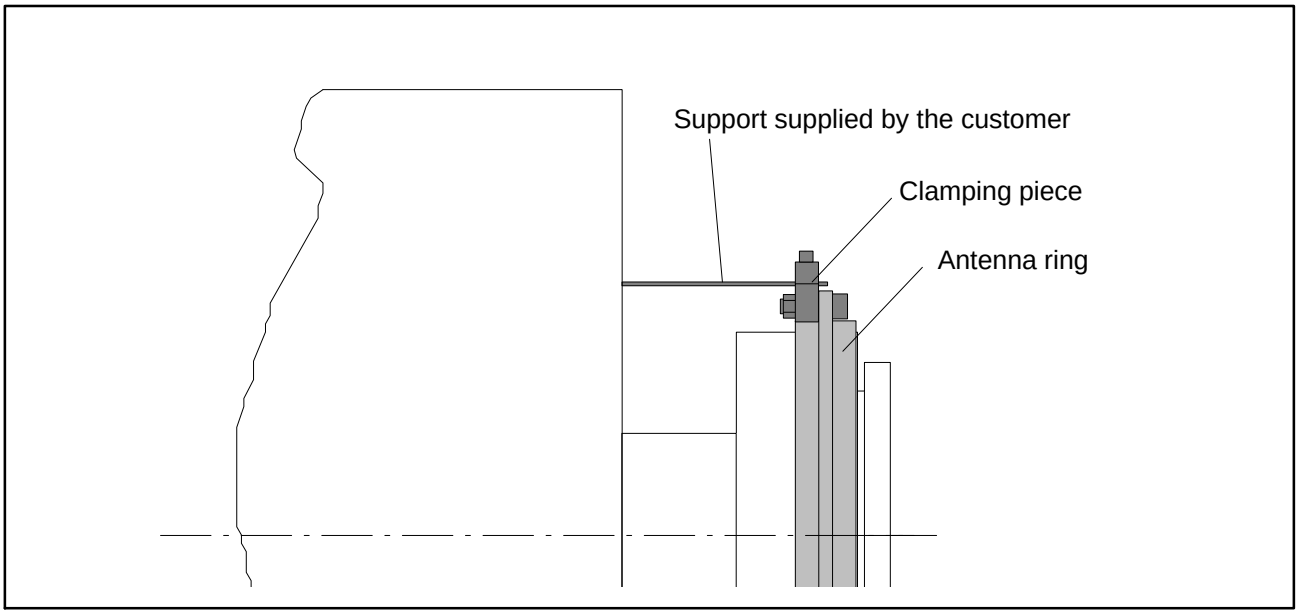

Fig. 4.6: Supporting the antenna ring

Assembly sequence

1. Loosen and remove the upper antenna segment screws.
2. Fasten the clamping piece with the enclosed screws as shown in Fig. 4.7. It is essential to use the new serrated locking washers.
3. Clamp a suitable supporting element (we recommend a threaded rod of ∅ 3...6 mm diameter) between the upper and lower parts of the clamping piece and tighten the clamping screws.

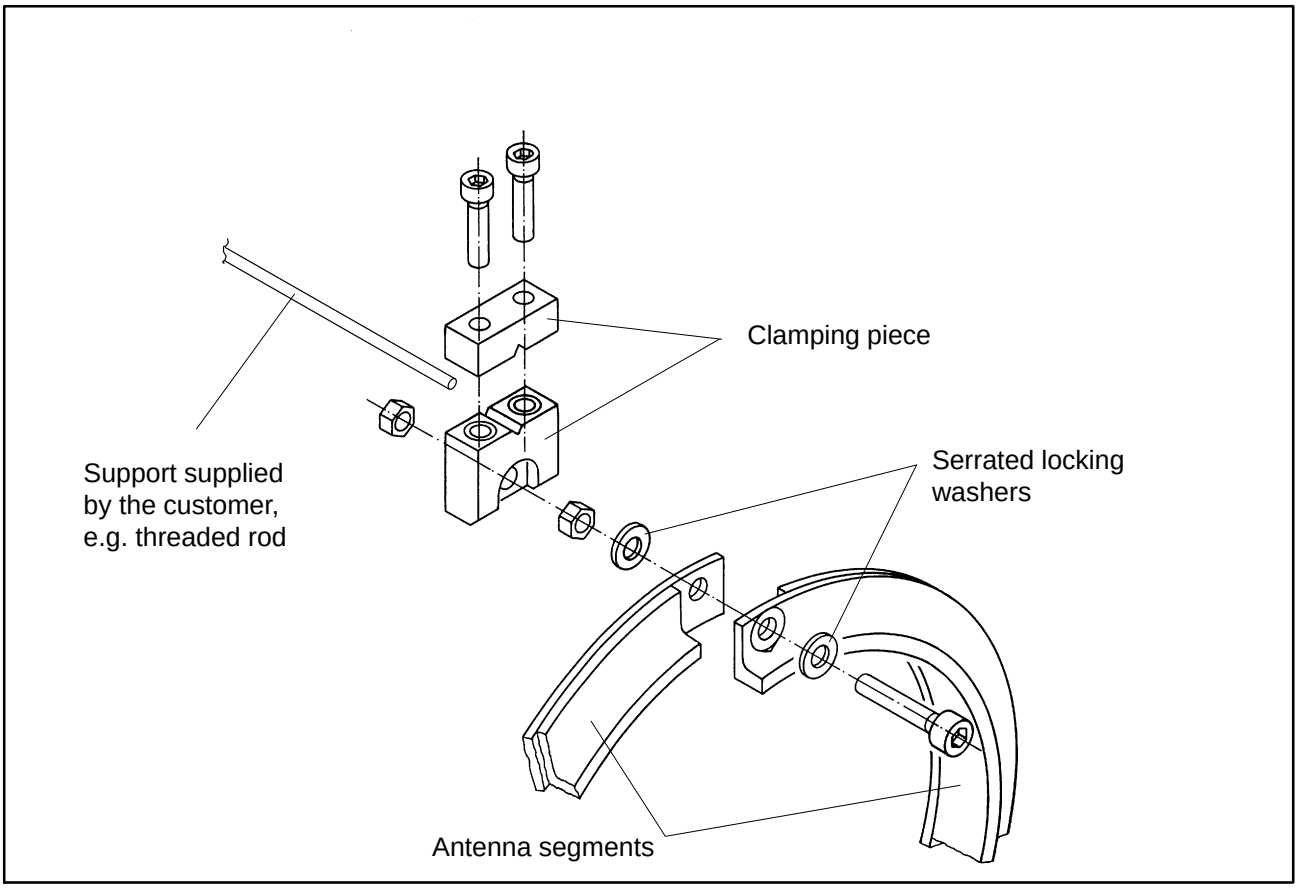

Fig. 4.7: Clamping piece assembly

4.7 Installing the slotted disc (speed measuring system)

The slotted disc for the speed measuring system is not fitted to the rotor in order to avoid damage in transit. It must be fastened to the adapter flange (or intermediate flange) before installing the rotor in the shaft run. The associated rotation speed sensor is already fitted to the stator.

The necessary screws, screwdriver and screw lock are included among the components supplied.

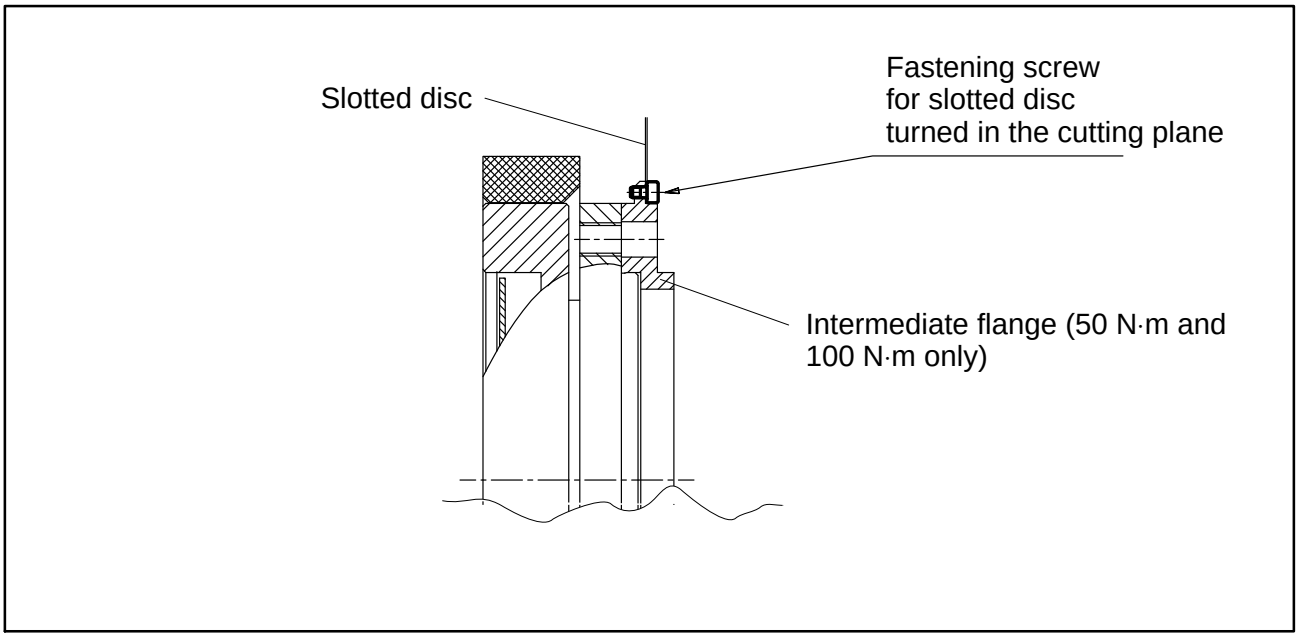

Fig. 4.8: Installing the slotted disc

CAUTION

When carrying out any installation work, make sure that the slotted disc is not damaged.

Assembly sequence

1. Slide the slotted disc onto the adapter flange (or auxiliary flange) and align the screw holes.
2. Put the screw lock a little way onto the screw thread and tighten the screws (tightening torque < 15 N·cm).

4.8 Aligning the stator (speed measuring system)

The stator can be installed in any position required (for example it can be installed “upside down”).

For measuring mode to operate perfectly, the slotted disc for the speed measuring system must rotate at a defined position in the sensor fork.

Axial alignment

The sensor fork is provided with an alignment mark for axial alignment. In its installed status the slotted disc must be positioned exactly over this alignment mark. Variances of up to ±2 mm are permitted in measuring mode (total static and dynamic displacement).

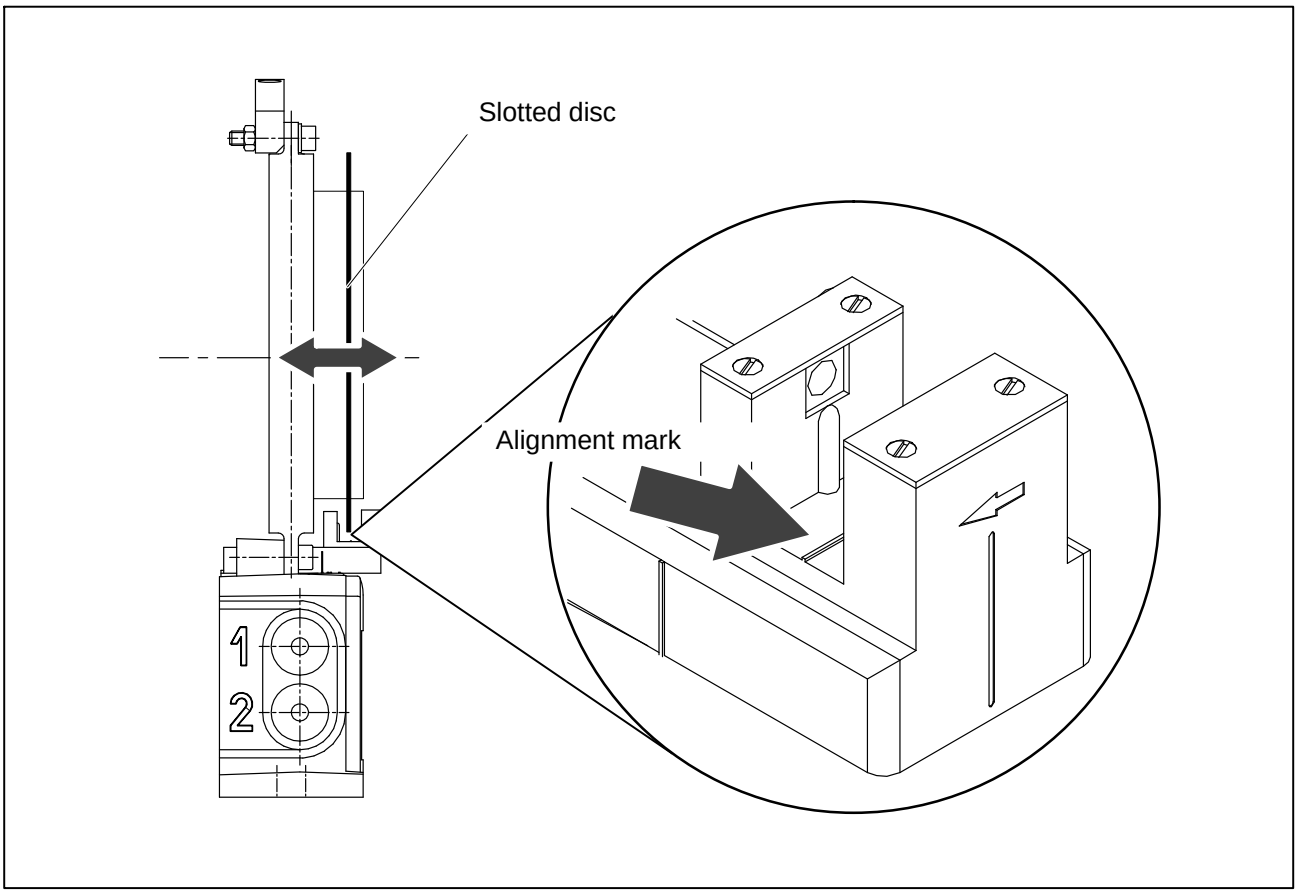

Fig. 4.9: Position of slotted disc in rotation speed sensor

NOTE

For fastening the stator we recommend M6 screws with packing washers (elongated hole width 9 mm). Using this size of screw ensures the necessary degree of mobility for alignment.

Radial alignment

The rotor axis and optical axis of the rotation speed sensor must in a line at a right angle to the stator platform. As an aid to alignment there is a conical knob (or coloured mark) in the middle of the adapter flange, and a vertical line is marked on the sensor head.

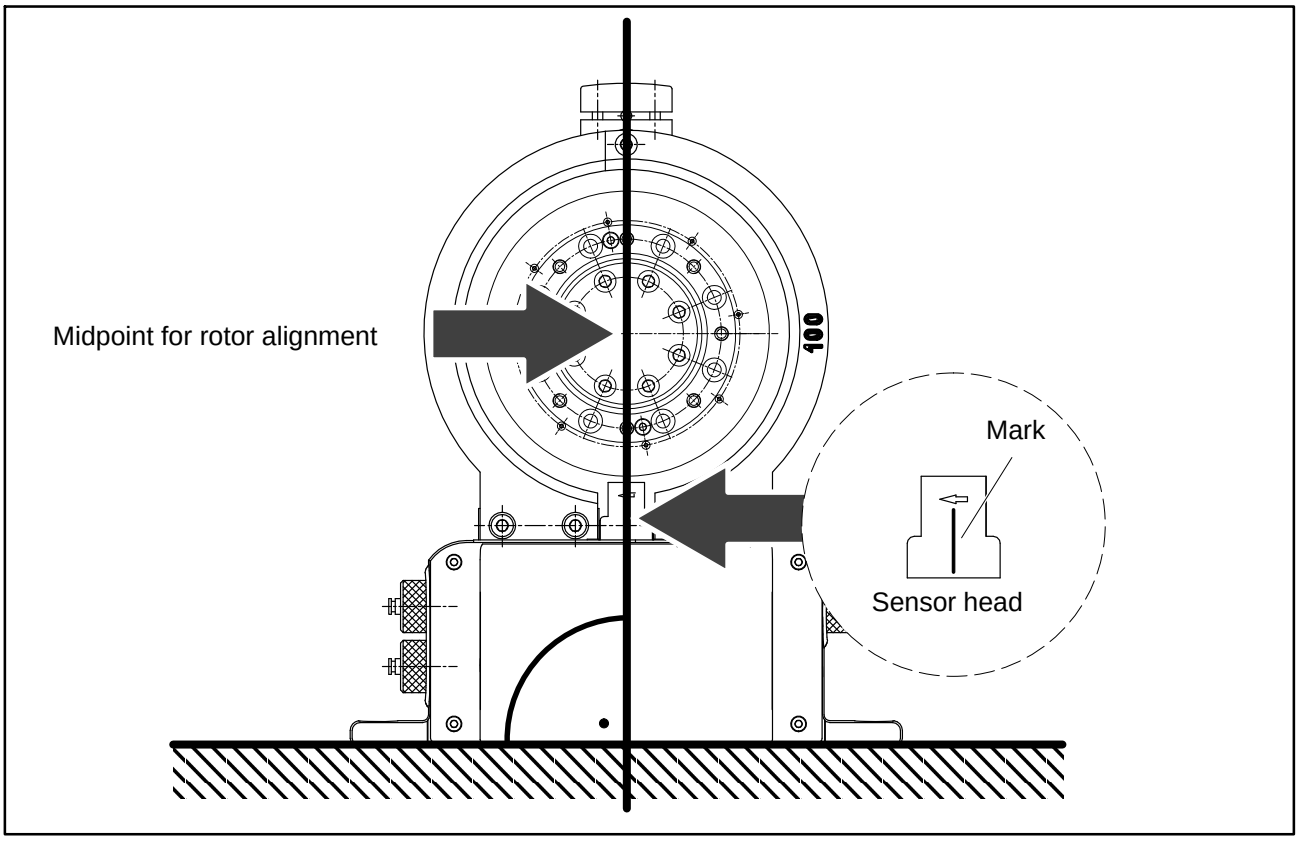

Fig. 4.10: Rotor and stator alignment markings

5 Electrical connection

5.1 General instructions

We recommend to use shielded, low–capacitance cable from HBM for the electrical connection between torque transducer and measuring amplifier.

With cable extensions it is important to ensure that a good connection is provided, with minimum contact resistance and good insulation. All plug connections or cap nuts have to be tightened firmly.

Do not route measurement cables in parallel to power lines and control circuits. If this is not possible (for example in cable ducts), maintain a minimum distance of 50 cm and protect the cable with a steel tube.

Avoid transformers, motors, contactors, thyristor controllers and similar sources of stray fields.

5.2 Shielding design

The cable screen is connected according to the HBM Greenline concept, thus enclosing the measuring system (without rotor) in a Faraday cage (for this it is important that the shielding on both cable ends is laid flat to the body of the casing) and preventing potential electromagnetic interferences from affecting the measuring signal. Special electronic coding methods are used to protect the transmission path and the rotor from electromagnetic interferences.

In the case of interferences due to potential differences (compensating currents), operating-voltage zero and housing ground must be disconnected on the amplifier and a potential-equilibration line between stator housing and amplifier housing must be established (copper conductor, 10 mm^2 wire cross-section).

If potential differences between the rotor and the stator occur in the machine, due perhaps to unchecked leakage, and give rise to interference, the situation is usually remedied by fully earthing the rotor, for instance with a wiper or brush. The stator must be similarly earthed.

5.3 Option 2, code KF1

On the stator housing is a 7–pin device connector (Binder 723), to which you connect the cable for the power supply and torque signal.

	Plug Connector Pin	Pin assignment	Wire color	Plug MS3106 Pin
Binder 723 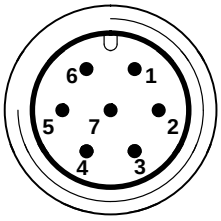 Top view	1	Operating voltage zero	WH	A
	2	Not used	BK	B
	3	Preamplifier supply voltage (+15 V)	BU	C
	4	Torque measuring–signal (12 V_{PP}; 5...15 kHz)	RD	D
	5	Not used		
	6	Rotor excitation voltage (54 V/80 V_{PP}; approx.15 kHz)	GN	F
	7	Rotor excitation voltage (0 V)	GY	G
		Shield on housing ground		

5.3.1 Adapting to the cable length

The way the torque flange operates is dependent on the method used for transmission between the rotor and the stator, and the following:

- Installation situation (e.g. cover, area free of metal)
- Length of cable
- Excitation voltage supply tolerances

For adaptation to different ratios, there are three switches in the stator housing which are accessible when the stator cover is removed.

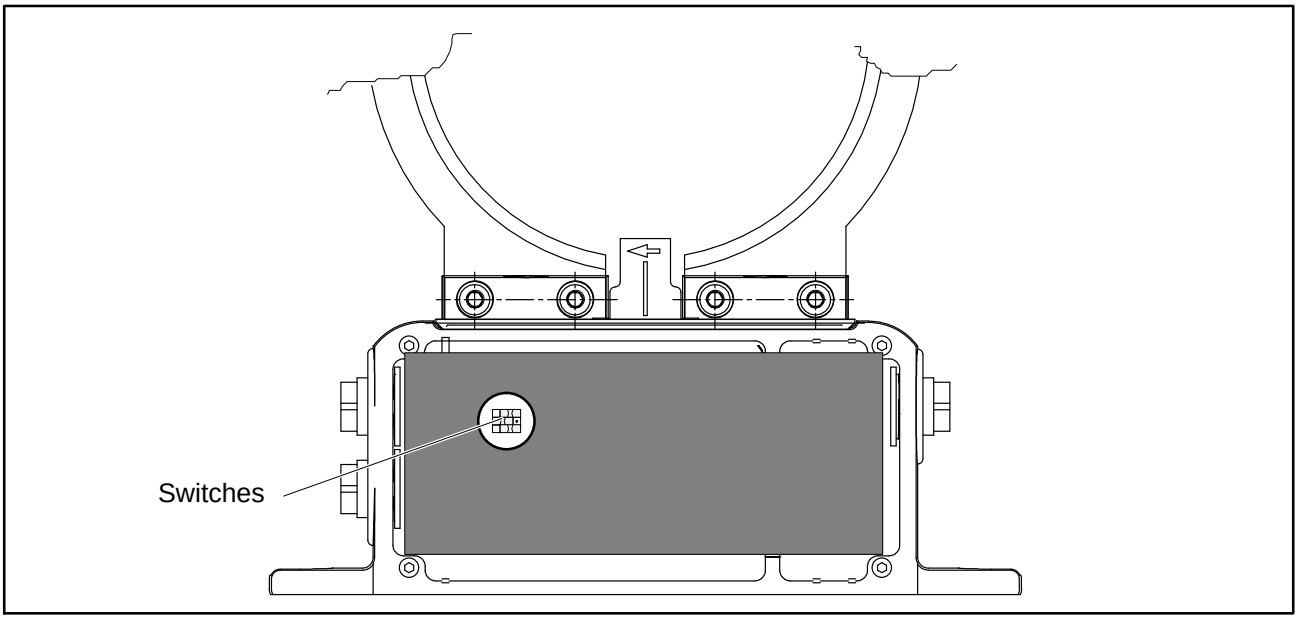

Fig. 5.1: Switches in the stator housing

Switch-position		Typical application
1		a) Older amplifiers b) For when the calibration signal is unintentionally initiated with very short cable
2		Normal position (ex-works position)
3		For cable lengths over approx. 20 m

Please ensure that after switching to position 3, the calibration signal is not initiated.

Potential interference problems and their solution:

Interference: No signal at output, amplifier displays an overflow.
Cause: Not enough power, T10F switches off.
Remedy: Switch position 3.

Interference: The calibration signal has been unintentionally triggered.
Remedy: Switch position 1.

5.4 Option 2, code SF1/SU2

On the stator housing there are two 7–pin device connectors (Binder 723), and if the speed module option is used there is also an 8–pin device connector. Their pin assignments depend on the chosen option.

The supply voltage and the calibration signal of plugs 1 and 3 are direct-coupled via multifuses (automatically resetting fuses).

Pin assignment for plug 1:
Power supply and frequency output signal.

	Plug Connector Pin	Pin assignment	Wire color	Sub-D Connector Pin
Binder 723 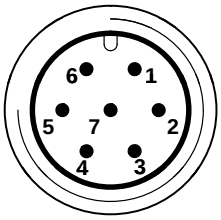 Top view	1	Measuring signal torque (frequency output; 5 V[1]; M /0 V)	WH	13
	2	Supply voltage 0 V; B	BK	5
	3	Supply voltage 18 V ... 30 V	BU	6
	4	Measuring signal torque (frequency output; 5 V[1]/12 V)	RD	12
	5	Measuring signal 0 V; M symmetrical	GY	8
	6	Calibration signal release 5 V...30 V	GN	14
	7	Calibration signal 0 V; C	GY	8
		Shield on housing ground		

[1] Factory setting; RS 422 complementary signals

CAUTION

Option 2, code SF1/SU2 torque flanges are intended for use with DC voltage supply only. They must not be connected to older HBM amplifiers using square–wave excitation. This could lead to the destruction of resistors on the connection board or other faults in the amplifiers (the torque flange on the other hand is protected and when the correct contacts have been replaced it is ready for service again).

Pin assignment for plug 2:
speed measuring system.

	Plug Binder Pin	Pin assignment	Wire color	Sub-D Plug Pin
Binder 723 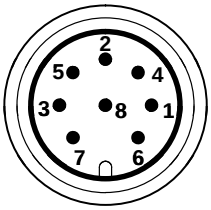 Top view	1	Measuring signal for rotation speed 5 V[1]; 0°	RD	12
	2	Not used		
	3	Measuring signal for rotation speed 5 V[1]; 90° phase shifted[2]	GY	15
	4	Not used		
	5	Not used		
	6	Measuring signal for rotation speed (5 V[1]; 0°)	WH	13
	7	Measuring signal for rotation speed 5 V[1]; 90° phase shifted[2]	GN	14
	8	Operating voltage zero M	BK	8
		Shield on housing ground		

[1] RS 422 complementary signals RS 422

[2] On switching to double frequency: static signal for direction of rotation.

Pin assignment for plug 3:
Power supply and voltage output signal.

	Plug Binder Pin	Pin assignment
Binder 723 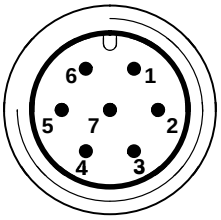 Top view	1	Measuring signal torque (voltage output; 0 V M)
	2	Supply voltage 0 V; B
	3	Supply voltage 18 V ... 30 V DC
	4	Measuring signal torque (voltage output, ±10 V)
	5	Not used
	6	Calibration signal release 5 V ... 30 V
	7	Calibration signal 0 V; C
		Shield on housing ground

5.5 Supply voltage

The transducer has to be operated with a separated extra low voltage (18...30 V DC supply voltage) which usually feeds one or several consumers in a test bench.

If the device is to be used in a DC voltage network[1)], additional measures have to be taken to ensure that over–voltages are discharged.

The notes in this chapter refer to standalone operation of the T10F without HBM system solutions.

The supply voltage is galvanically isolated from signal outputs and calibration signal inputs. Connect an extra–low safe voltage of 18 V...30 V to pin 3 (+) and pin 2 (⏚) of connector 1 or connector 3. We recommend that you use HBM cable KAB 8/00–2/2/2 and the appropriate connector jacks, since when operated at nominal voltage (24 V) the cable can be up to 50 m long, or 20 m long if within the nominal voltage range (see Accessories, page 47) . If the permitted cable length is exceeded, you may supply the required voltage over two cables connected in parallel (connectors 1 and 3). This enables you to double the permitted length. Alternatively an on-site power pack should be installed.

If you feed the supply voltage through an unshielded cable, the cable must be twisted (interference suppression). We also recommend that a ferrite element should be located close to the connection plug on the cable, and the stator should be earthed.

CAUTION

At the instant of switching on, a current of up to 2 A may flow and this may switch off power packs with electronic current limiters.

1) Distribution system for electrical energy over a wide area (e.g. over several test benches) which possibly also supplies consumers with high nominal (rated) currents.

6 Calibration

T10F torque flanges deliver an electrical calibration signal which can be picked up by the amplifier in the case of measuring systems using HBM com–ponents. The torque flange generates a calibration signal of about 50 % of the nominal torque. The precise value is specified on the type plate. Adjust the amplifier output-signal to the calibration signal supplied by the connected torque flange to adapt the amplifier to the torque flange.

To create stable conditions, the transducer should be allowed a 15–minute warm–up phase before the calibration signal is activated.

In order to reproduce the measured values recorded in the test report, the boundary conditions regarding the comparability (e.g. mounting position) must be reproduced.

NOTE

The measurement flange should not be under load when the calibration signal is being measured, since the calibration signal is mixed additively.

CAUTION

To maintain measurement accuracy, the calibration signal should be connected for no more than 5 minutes. A similar period is then needed as a cooling phase before triggering the calibration signal again.

6.1 Calibration option 2, code KF1

The calibration signal is triggered by increasing the excitation voltage from 54 V_{PP} to 80 V_{PP} (pins 6 and 7, connector 1).

6.2 Calibration option 2, code SF1/SU2

The calibration signal is triggered by connecting an extra–low safe voltage of 5 V to pins 6 (+) and 7 (⏚) of connector 1 or connector 3.

The rated voltage for triggering the calibration signal is 5 V (triggered when U>2.7 V). The trigger voltage is galvanically isolated from the supply voltage and the measurement voltage. The maximum permitted voltage is 30 V. At voltages lower than 0.7 V, the measuring flange is in measurement mode.

Current drain at rated voltage is approx. 2 mA and at maximum voltage is approx. 22 mA.

NOTE

In the case of HBM system solutions, the calibration signal is triggered by the amplifier.

7 Settings

NOTE

A table with all the relevant switch positions can be found on the back of the stator cover. Any changes to the factory settings should be noted here using a waterproof felt–tip pen.

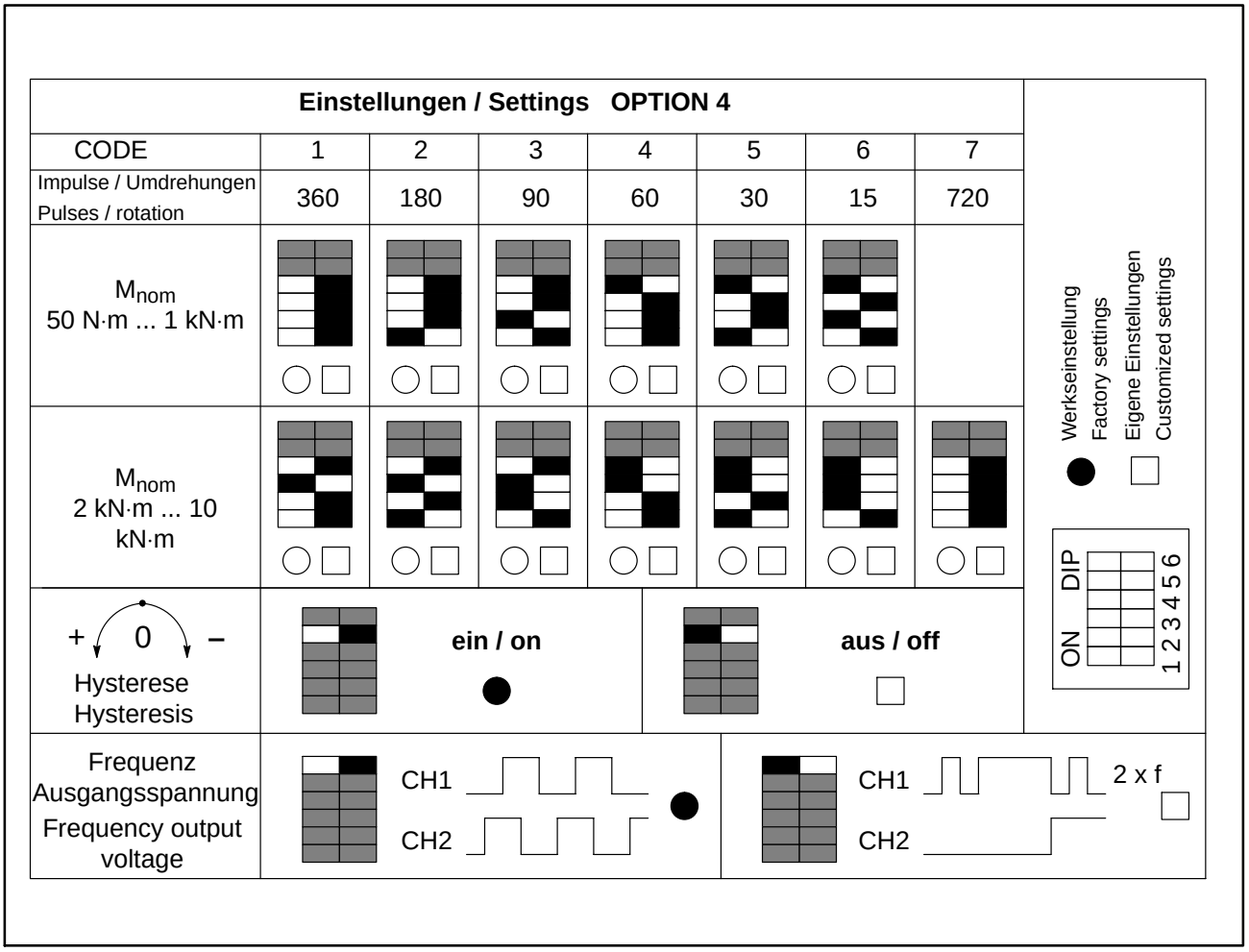

Fig. 7.1: Adhesive label with switch positions

7.1 Torque output signal, code KF1

The factory setting for the frequency output voltage is 12 V (asymmetrical). The frequency signal is on pin 4 opposite pin 1. No voltage switching is possible.

7.2 Torque output signal, code SF1/SU2

The factory setting for the frequency output voltage is 5 V (symmetric, RS 422 complementary signals). The frequency signal is on pin 4 opposite pin 1. You may switch the output voltage to 12 V (asymmetrical). To do this you must set switches S1 and S2 to position 1 (in this case pin 1 →).

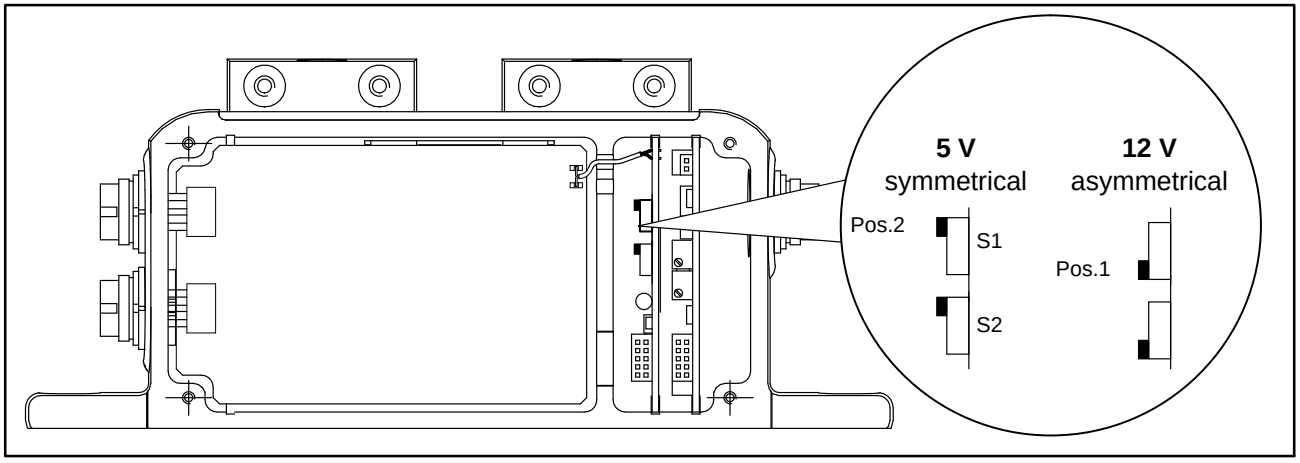

Fig. 7.2: Switches for changing the frequency output voltage

7.3 Setting up zero point

If you have a torque flange with the voltage output option (SU2), you can remove the identification plate to gain access to two potentiometers. You can use the zero point potentiometer to correct certain zero point variances. The range of compensation is minimum ±400 mV at nominal amplification. The end point potentiometer is used for balancing at the factory and is capped with varnish so that it cannot be turned unintentionally.

CAUTION

If the end point potentiometer is turned, it changes the factory–set calibration for the voltage output.

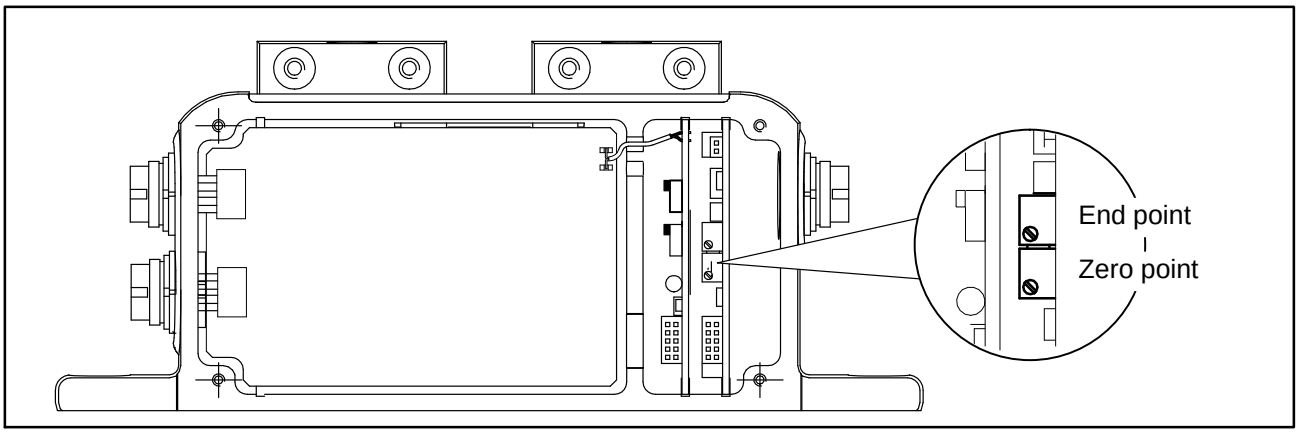

Fig. 7.3: Setting up voltage output zero point

7.4 Functional testing

7.4.1 Power transmission

If you suspect that the transmission system is not working correctly, you can remove the stator cover and check the functioning of the equipment. If the LED is shining, the rotor and stator are properly aligned and there is no interference with the transmission of measuring signals. When the calibration signal is triggered, the LED shines more brightly.

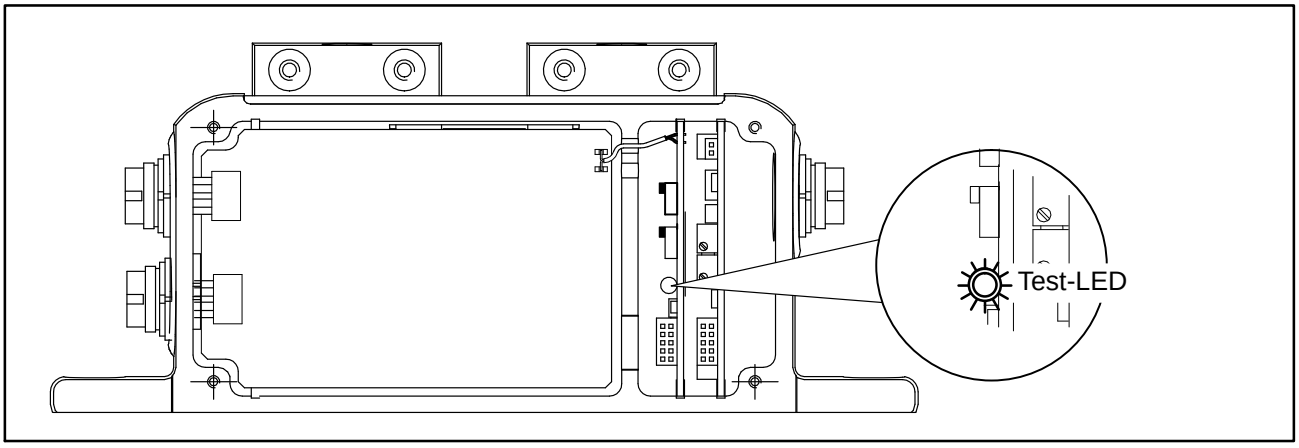

Fig. 7.4: Checking that power transmission is functioning correctly

7.4.2 Aligning the speed module

If necessary you can check that the speed measuring system is working correctly.

1. Remove the stator cover.
2. Turn the rotor with at least 2 rpm.

If both control LEDs light during rotation, the speed measuring system is correctly aligned and fully functional.

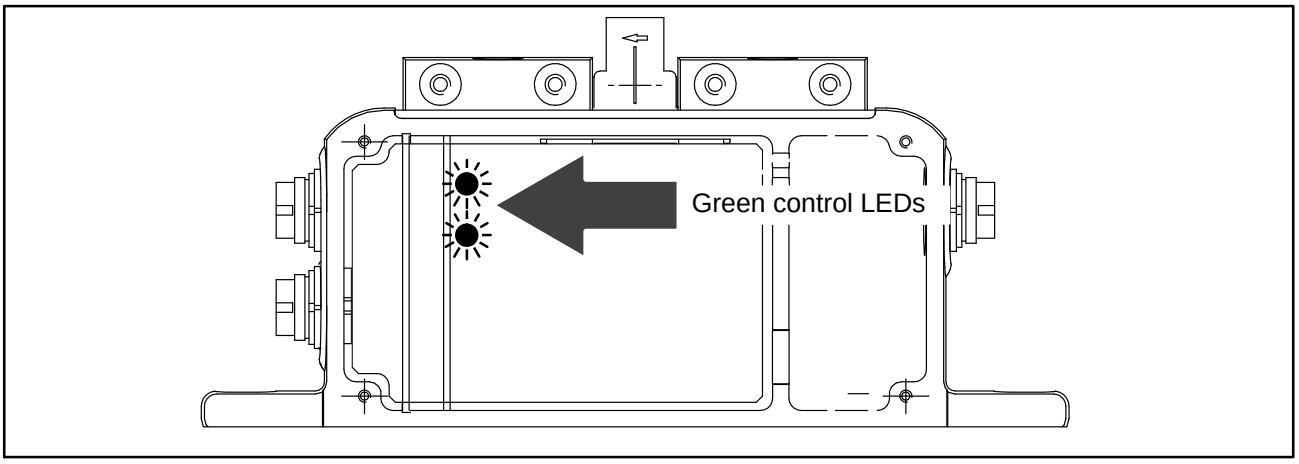

Fig. 7.5: Control LEDs for the speed measuring system

CAUTION

When closing the stator cover, make sure that the internal connection cables are in the purpose–designed cable slots and not trapped.

7.5 Setting up the number of pulses

If the speed module option is being used, the number of pulses per revolution of the rotor can be adjusted with the aid of DIP switches S1 to S4.

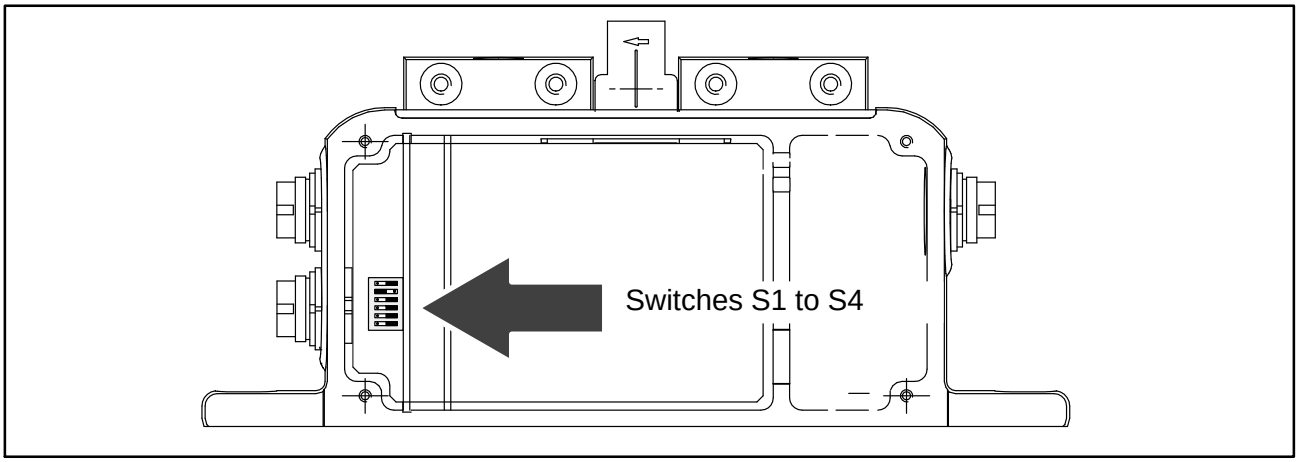

Fig. 7.6: Switches for setting up the number of pulses

Setting up the number of pulses

1. Remove the stator cover.
2. Set up the required number of pulses in accordance with Fig. 7.7 using switches S1 to S4.

Pulses/revolution[1)]	360	180	90	60	30	15	720
Torque 50 N·m...1 kN·m	S4 S1						
Torque 2 kNmN·m...10 kNmN·m	S4 S1						

Fig. 7.7: Switch position for number of pulses (▬ ≙ switch buttons)

[1)] Factory setting depending on order option 4.

7.6 Oscillation suppression (hysteresis)

Low rotation speeds and high relative oscillations between the rotor and the stator can give rise to harmful signals indicating reversal of the sense of rotation. Electronic suppression (hysteresis) is switched on in the factory to remedy this interference. It enables interference from radial oscillation of the stator with an amplitude of approx. 2 mm to be suppressed.

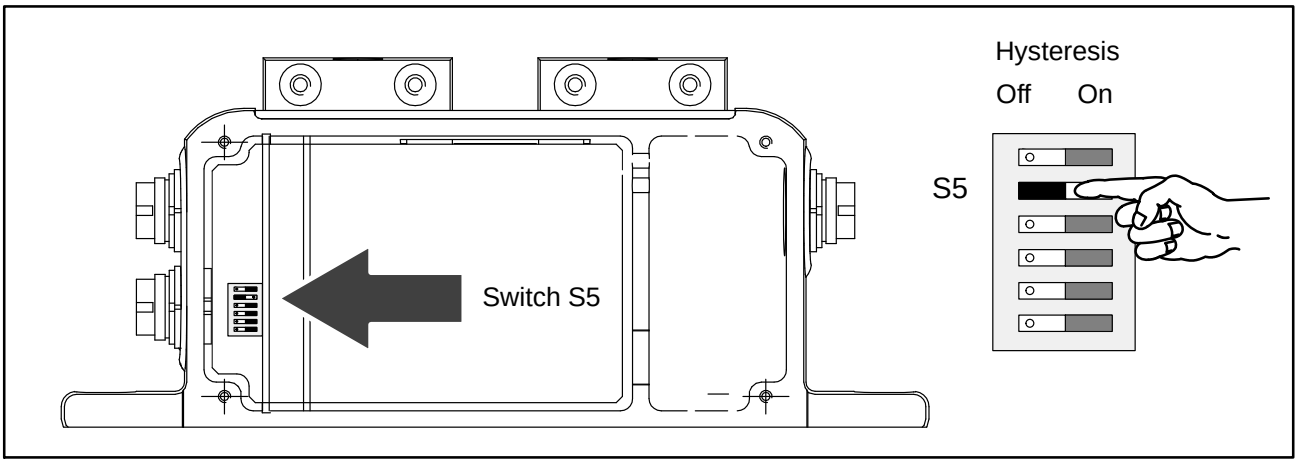

Fig. 7.8: Switch for turning off hysteresis

7.7 Form of the speed output signal

In the factory setting there are two speed signals at the speed output (connector 2). They are 90° phase shifted (5 V symmetrical, RS 422 complementary signals). You may double the number of pulses set up in each case by setting switch S6 to the “On” position. Pin 3 outputs the direction of rotation as a static direction of rotation signal (pin 3=+5 V, pin 7=0 V opposite pin 8), when the shaft rotates in the direction of the arrow. When rotation speed is 0 rpm the direction of rotation signal takes the last measured value.

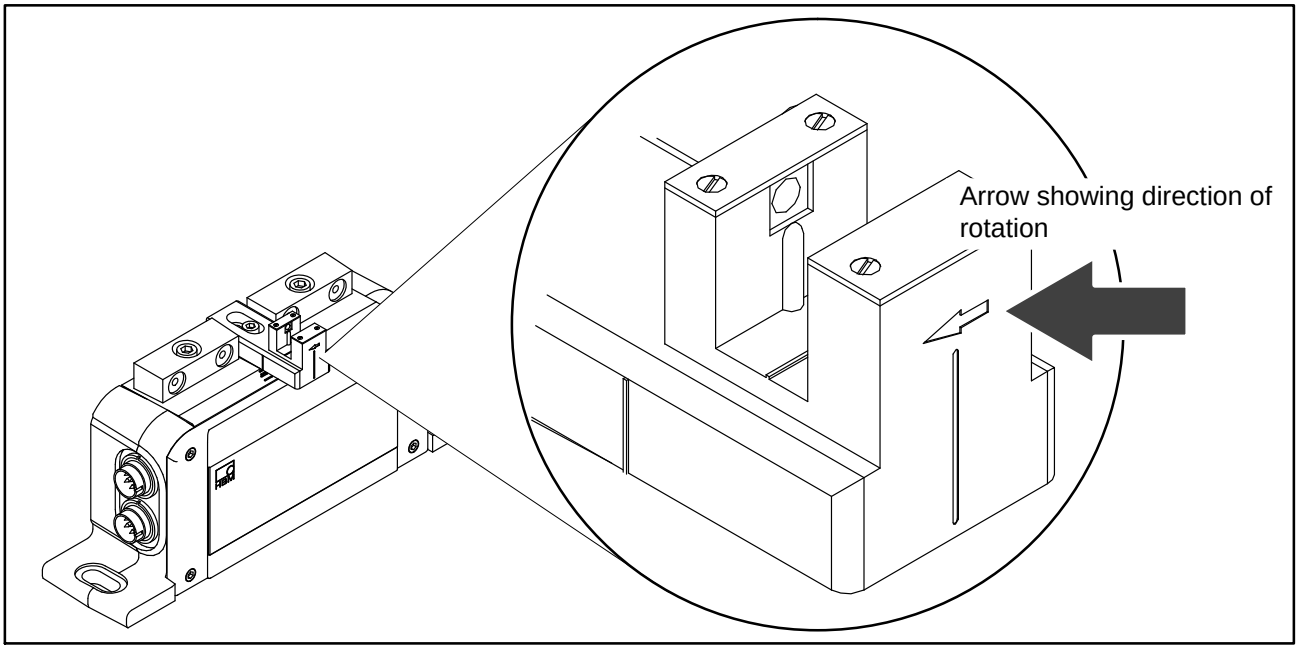

Fig. 7.9: Arrow showing direction of rotation on sensor head

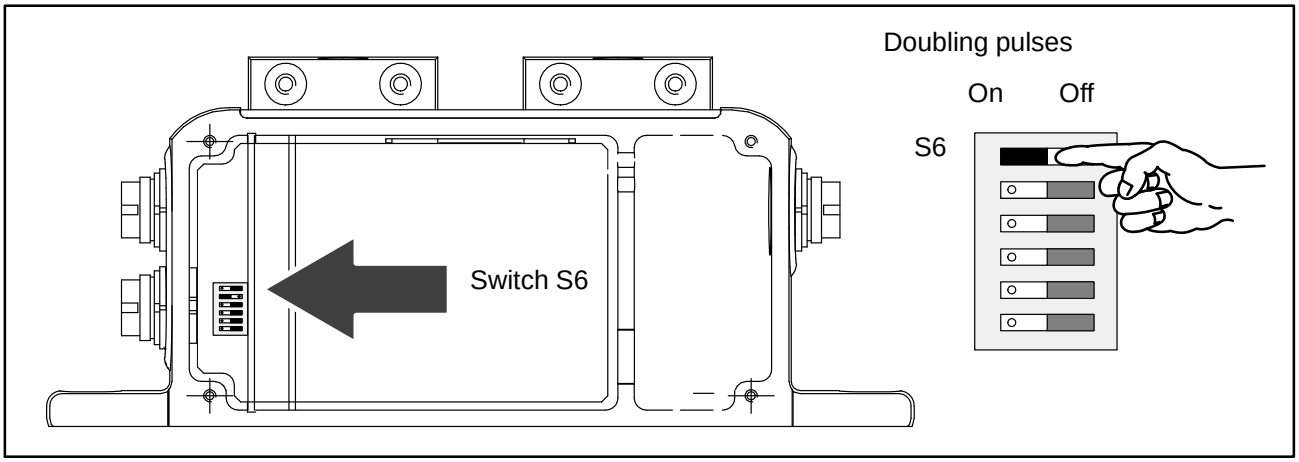

Fig. 7.10: Switch for doubling pulses

7.8 Type of rotation speed output signal

You may use switch S7 to change the symmetrical 5 V output signal (factory setting) to an asymmetrical signal in the 0 V...5 V range.

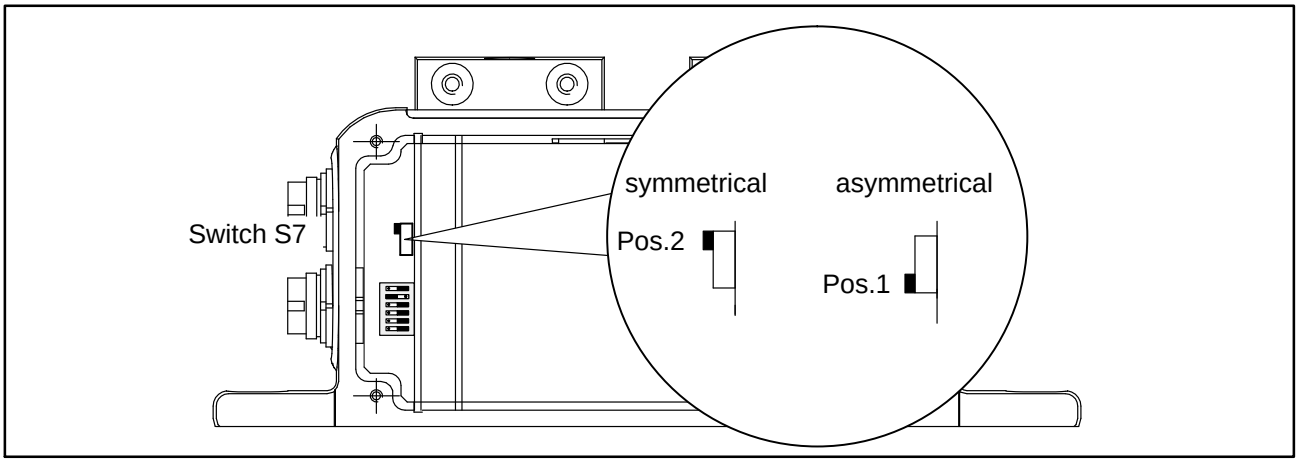

Fig. 7.11: Switch S7; symmetrical/asymmetrical output signal

8 Loading capacity

Nominal (rated) torque may be statically exceeded up to the limiting torque. If nominal torque is exceeded, further irregular loadings are not permitted. This includes longitudinal and lateral forces and bending moments. The limit values are specified in the chapter called ”Technical data”, page 48.

8.1 Measuring dynamic torques

The torque flanges can be used to measure static and dynamic torques. The following applies for the measurement of dynamic torques:

- The T10F calibration made for static measurements is also valid for dynamic torque measurements.
- The natural frequency f_0 for the mechanical measuring system depends on the moments of inertia J_1 and J_2 of the connected rotating masses and the T10F’s torsional stiffness.

Use the equation below to determine the natural frequency f_0 for the mechanical measuring system:

$$f_0 = \frac{1}{2\pi} \cdot \sqrt{c_T \cdot \left(\frac{1}{J_1} + \frac{1}{J_2}\right)}$$

f_0 = Natural frequency in Hz
J_1, J_2 = Mass moment of inertia in kg·m^2
c_T = Torsional stiffness in N·m/rad

- The maximum permissible amplitude of vibration (peak-to-peak) may be 160 % (at nominal torque 50 N·m=320 %, 10 kN·m=120 %) of the T10F's nominal torque, even with alternating load. The amplitude must be within the loading range defined by $-M_{nom}$ and $+M_{nom}$ (at 50 N·m: $-2 \cdot M_{nom}$ ... $+2 \cdot M_{nom}$). This also applies when resonating points are being run through.

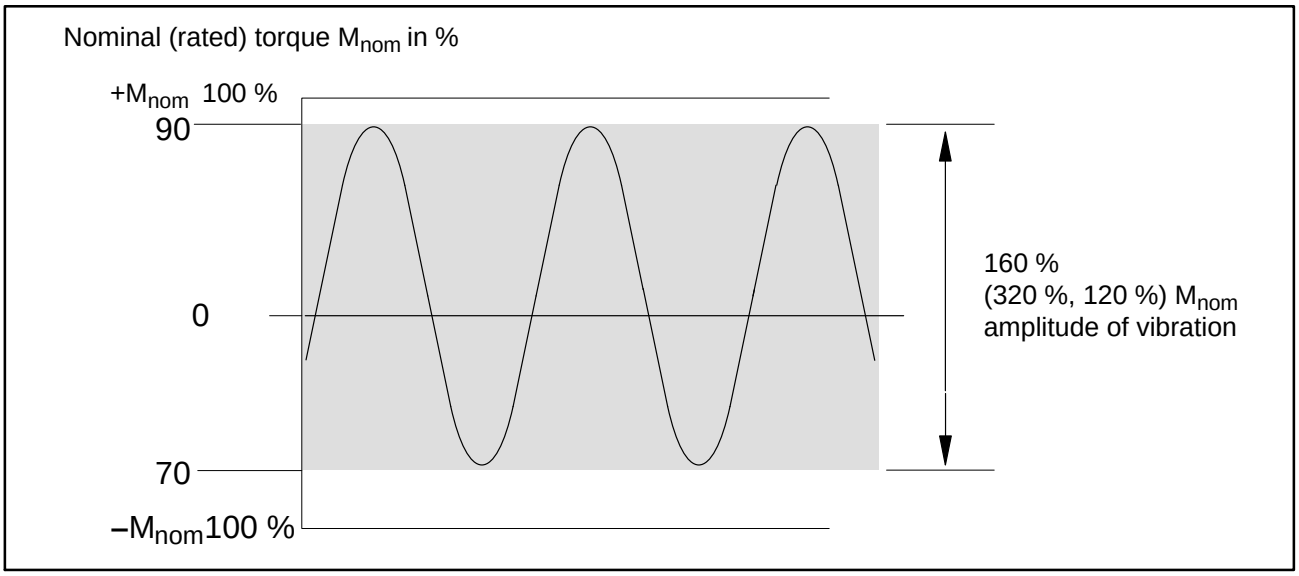

Fig. 8.1: Permissible dynamic loading

9 Maintenance

Torque flanges are maintenance–free.

9.1 Maintenance of the speed module

Depending on ambient conditions, the slotted disc on the rotor and the associated sensor optics on the stator may become dusty in the course of operation. This makes itself felt as a change of polarity in the display. If this should happen the sensor and the slotted disc must be cleaned.

1. Clean the slotted disc using compressed air (up to 6 bar).
2. Carefully clean the sensor optics using a dry or spirit–moistened cotton wool stick. **Never use any other kind of solvent.**

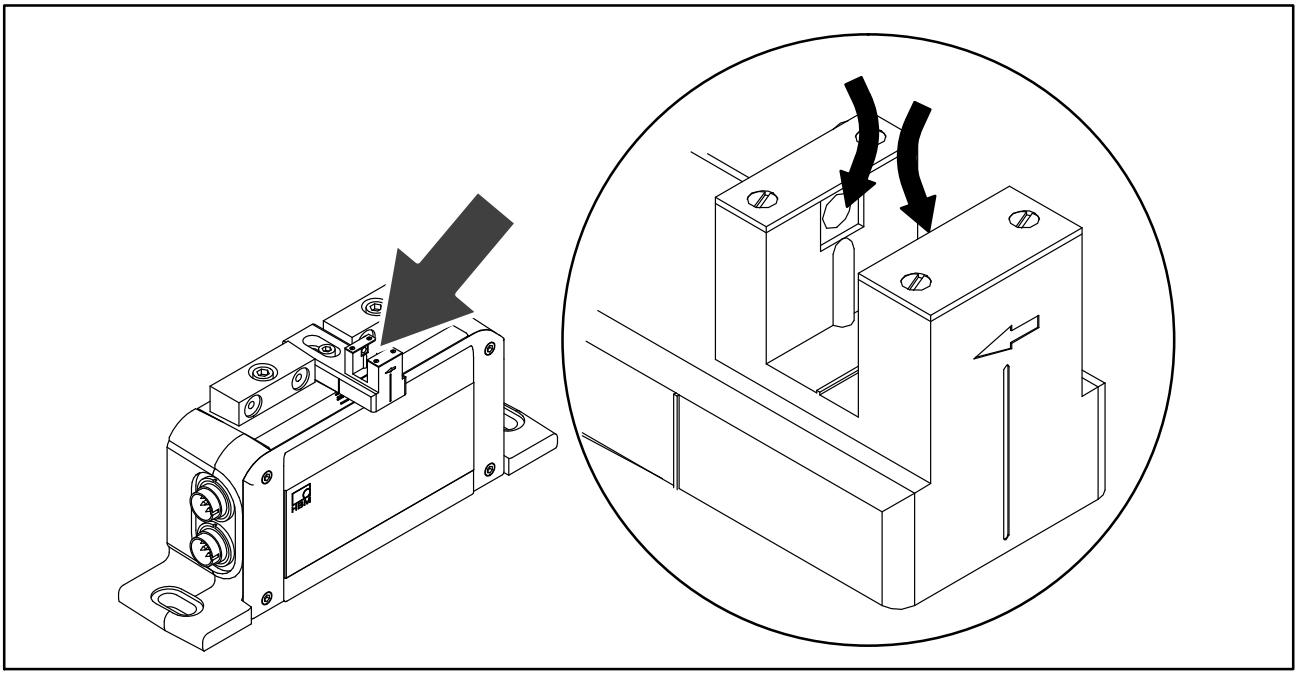

Fig. 9.1: Areas to clean on the rotation speed sensor

10 Dimensions

10.1 Rotor dimensions

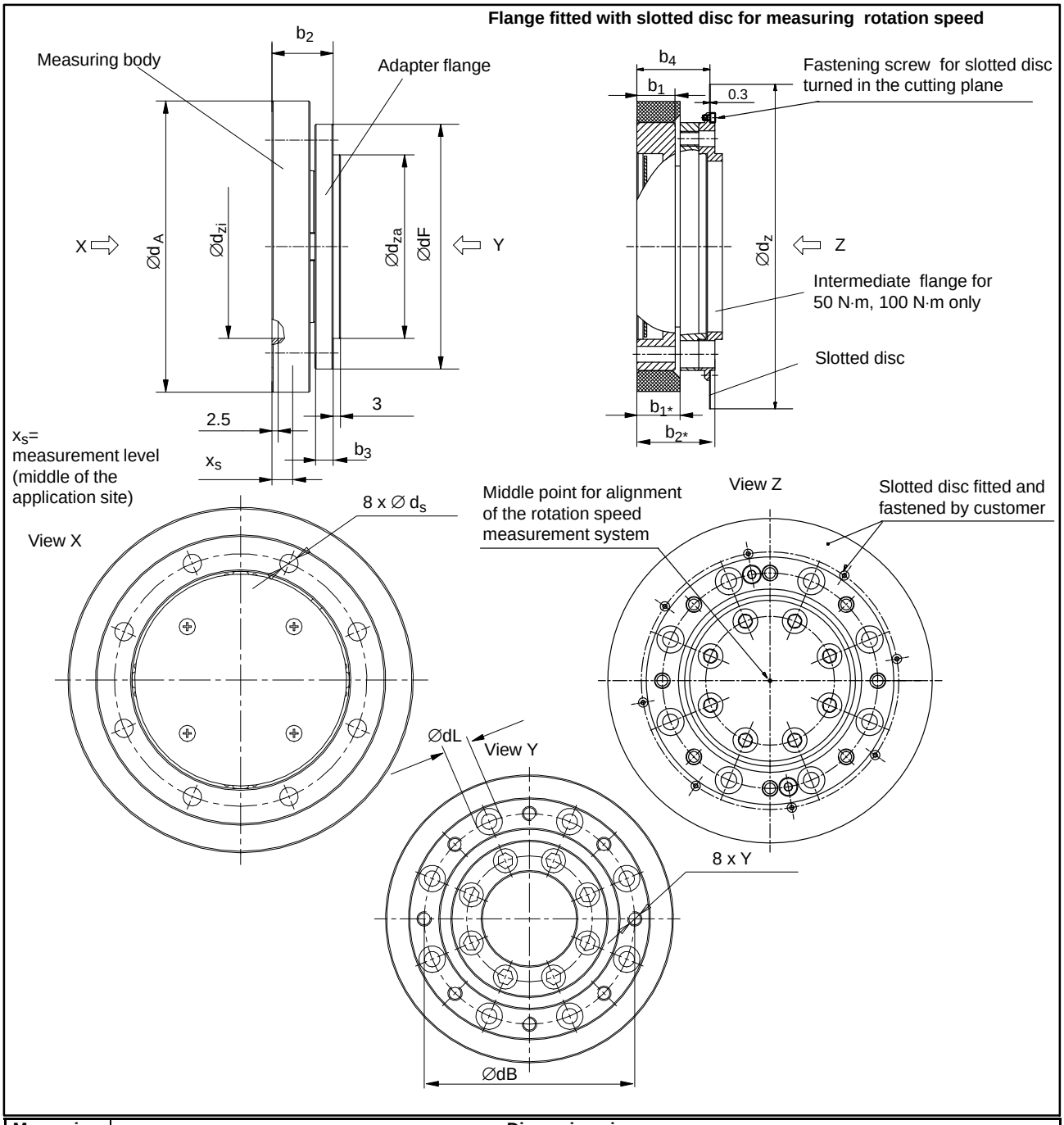

Measuring range	Dimensions in mm															
	b_1	b_{1*}	b_2	b_{2*}	b_3	b_4	$Ød_A$	$Ød_B$	$Ød_F$	$Ød_L$	$Ød_Z$	$Ød_{za\ g5}$	$Ød_{zi}$ H6	$Ød_S$	Y	X_S
50 N·m	15.5	17.5	25	31.5	7.5	29.5	117	87	100	11	131	75	75	6.4	M6	13
100 N·m	15.5	17.5	25	31.5	7.5	29.5	117	87	100	11	131	75	75	6.4	M6	13
200 N·m	17.5	17.5	30.5	30.5	11	29.5	137	105	121	14	151	90	90	8.4	M8	14
500 N·m	20.5	20.5	40.5	40.5	18	33	173	133	156	20	187	110	110	13	M12	15.5
1 kN·m	20.5	20.5	40.5	40.5	18	33	173	133	156	20	187	110	110	13	M12	15.5
2 kN·m	22.5	22.5	42.5	42.5	18	35	207	165	191	24	221	140	140	15	M14	16.5
3 kN·m	27.0	22.5	55	55	26	35	207	165	191	24	221	140	140	15	M14	18.8
5 kN·m	28.5	28.5	64	64	33.5	41	254	206	238	30	269	174	174	19	M18	19.5
10 kN·m	33.5	28.5	69	69	33.5	41	254	206	238	30	269	174	174	19	M18	22.5

10.2 Dimensions stator B

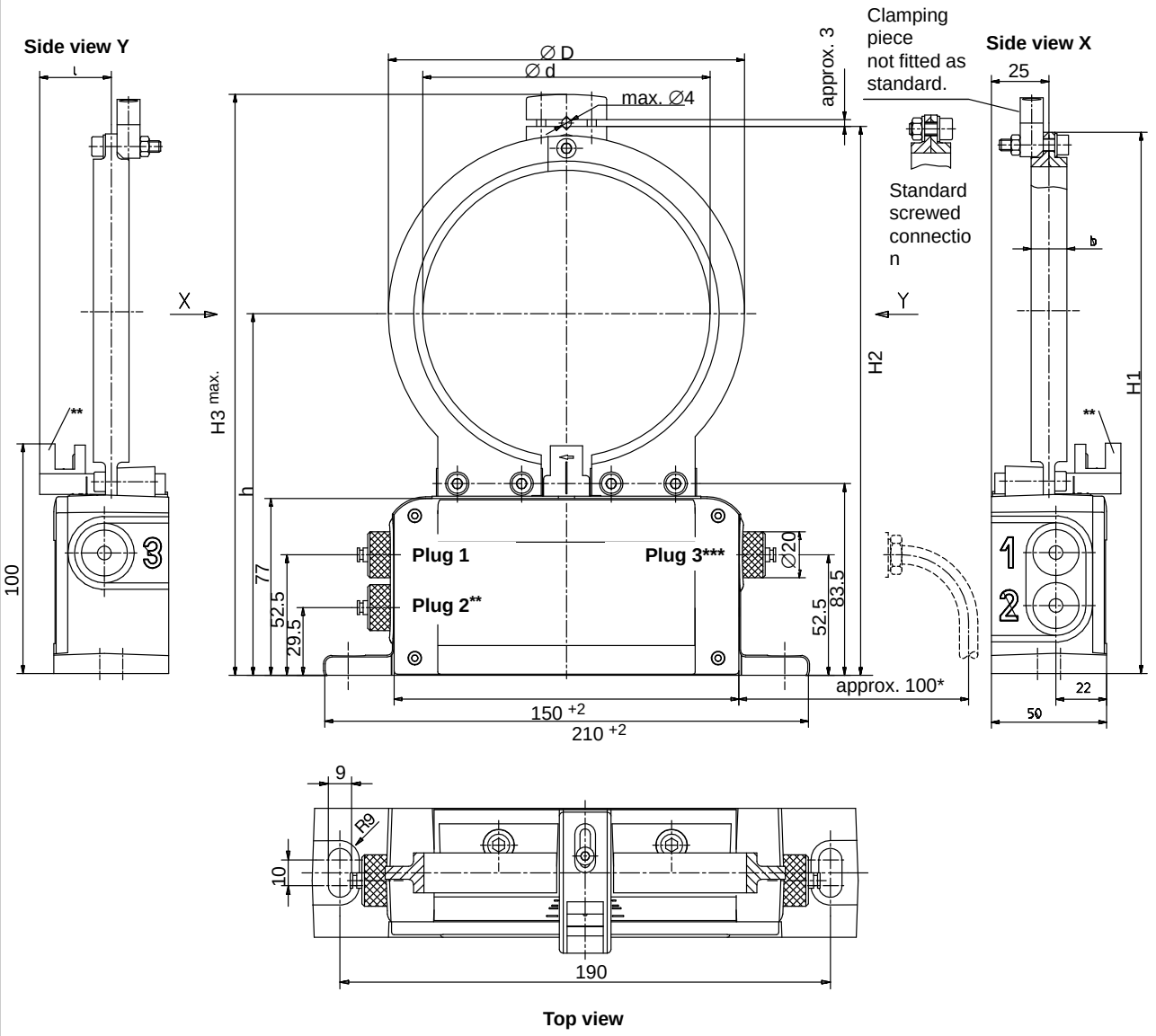

* Working space for connection cable with plugin cable connector
** With speed measuring option only
*** Not included with version KF1

Measuring range	Dimensions in mm							
	b	∅d	∅D	H1	H2	H3	h	l
50 N·m	15.5	125	155	235	239	253	157.5	31.5
100 N·m	15.5	125	155	235	239	253	157.5	31.5
200 N·m	17.5	145	175	255	259	273	167.5	31.5
500 N·m	20.5	181	211	291	295	309	185.5	33.5
1 kN·m	20.5	181	211	291	295	309	185.5	33.5
2 kN·m	22.5	215	245	325	329	343	202.5	34.5
3 kN·m	22.5	215	245	325	329	343	202.5	34.5
5 kN·m	28.5	262	292	373	377	391	226.5	37.5
10 kN·m	28.5	262	292	373	377	391	226.5	37.5

10.3 Mounting dimensions

Mounting dimensions			
Measuring range	**Dimension "m" (mm)**	**Area free of metal*) parts "a" (mm)**	
		a	x
50 N·m	16.25	20	29.5
100 N·m			
200 N·m	21.75	20	29
500 N·m	30.25	20	29.5
1 kN·m	30.25	20	29.5
2 kN·m	31.25	25	29
3 kN·m	43.75	25	29
5 kN·m	49.75	35	29.5
10 kN·m	54.75	35	29.5

*) Support using a metal bar with the recommended dimensions is permissible.

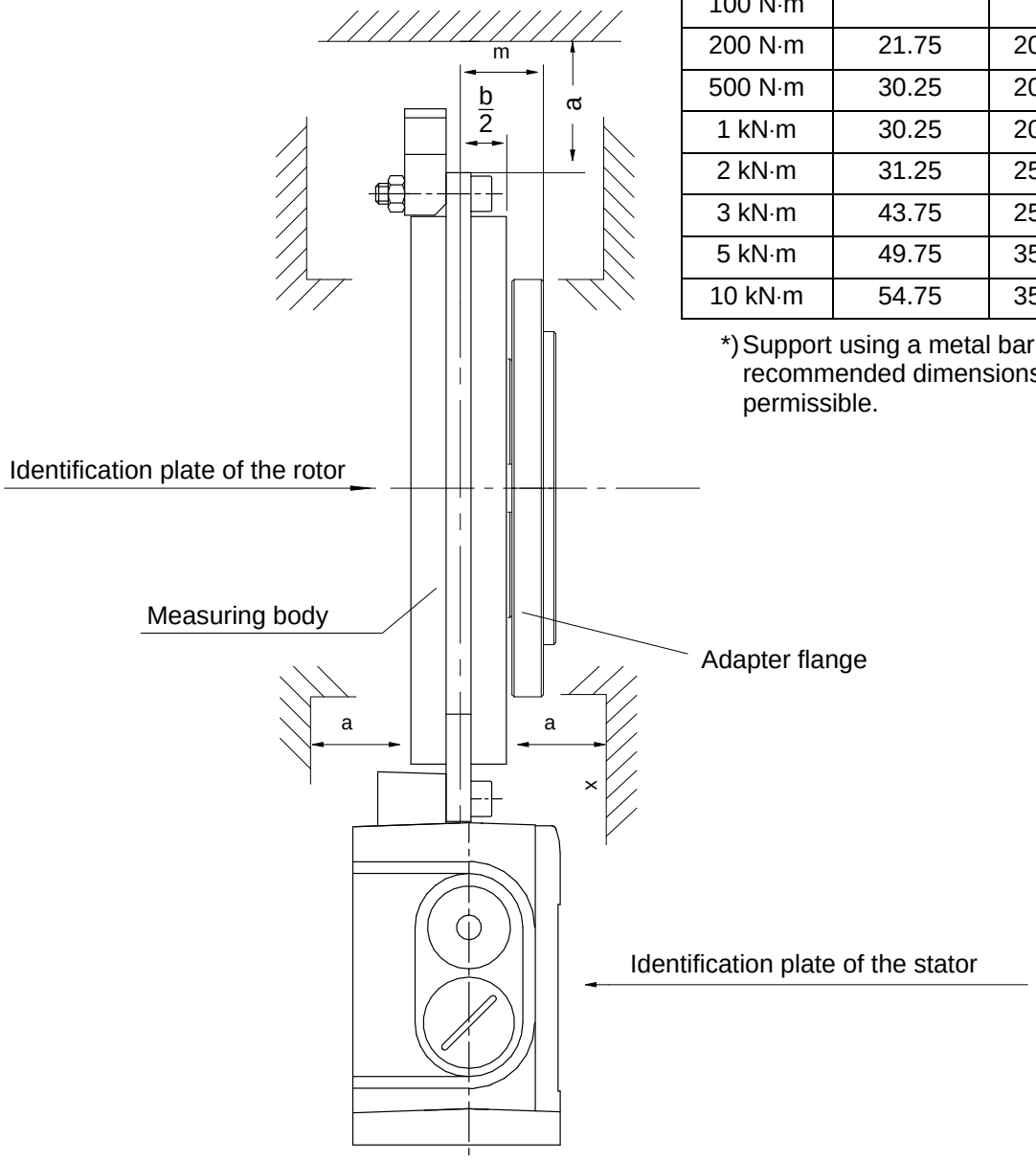

11 Order numbers, accessories

Code	Option 1: Measuring range
050Q	50 N·m
100Q	100 N·m
200Q	200 N·m
500Q	500 N·m
001R	1 kN·m
002R	2 kN·m
003R	3 kN·m
005R	5 kN·m
010R	10 kN·m

Code	Option 4: speed measuring system [2]
0	Without rotation speed measurement system
1	360 Pulses/revolution
2	180 Pulses/revolution
3	90 Pulses/revolution
4	60 Pulses/revolution
5	30 Pulses/revolution
6	15 Pulses/revolution
7	720 Pulses/revolution [3]

Code	Option 2: Electrical configuration
KF1	Output signal 10 kHz ± 5 kHz, excitation voltage 14 kHz/54 V; square–wave
SF1	Output signal 10 kHz ± 5 kHz, supply voltage 18...30 V DC
SU2	Output signal 10 kHz ± 5 kHz and ± 10 V, supply voltage 18...30 V DC

Code	Option 5: Connecting cable
V0	Without connecting cable
V1	Torque connecting cable for KF1, 423–free ends, 6 m
V2*)	Torque connecting cable for KF1, 423–free ends, max. 80 m
V3	Torque connecting cable for KF1, 423–MS3106PEMV, 6 m
V4*)	Torque connecting cable for KF1, 423–MS3106PEMV, max. 80 m
V5	Torque connecting cable for SF1/SU2, 423–D-Sub 15P, 6 m
V6*)	Torque connecting cable for SF1/SU2, 423–D-Sub 15P, max. 50 m
W1	One torque and speed cable each, 423–D-Sub 15P, 6 m
W2*)	One torque and speed cable each, 423–D-Sub 15P, max. 50 m

Code	Option 3: Linearity variation including hysteresis
S	< ± 0.1
G	< ± 0.05[1]

Code	Option 6: Fitted couplings MODULFLEX® [4]
N	Without coupling
Y	With coupling

[1] With voltage output < ±0.07

[2] With option 2, codes SF1, SU2 only

[3] With option 1, codes 002R, 003R, 005R, 010R only

[4] For specifications see data sheet B0506.

Order–No.: K–T10F– [ ][ ][ ][ ] - [ ][ ][ ] - [ ] - [ ] - [ ][ ] - [ ] [ ][ ][ ] m*)

Typical order: K–T10F – 5 0 0 Q - S F 1 - S - 0 - V 5 - Y [ ][ ][ ] m*)

*) When selecting V2, V4, V6 and W2 please state length of cable required.

Accessories, to be ordered separately:

423G–7S cable socket, 7-pole, straight cable entry,
for torque output (connector 1, 3), order no. 3–3101.0247

423W–7S cable socket, 7-pole, 90° cable entry,
for torque output (connector 1, 3), order no. 3–3312.0281

423G–8S cable socket, 8-pole, straight cable entry,
for speed output (connector 2), order no. 3–3312.0120

423W–8S cable socket, 8-pole, 90° cable entry,
for speed output (connector 2), order no. 3–3312.0282

Raw cable Kab8/00–2/2/2, order no. 4–3301.0071

12 Specifications

Type		T10F			
Class of accuracy		0.1			
Torque measurement system					
Nominal (rated) torque M_{nom}	N·m	50	100	200	500
for reference only	ft–lb	37.5	75	150	375
Nominal (rated) sensitivity (nominal signal range between torque = zero and nominal torque)					
Frequency output	kHz	5			
Voltage output	V	10			
Characteristic tolerance (deviation of the actual output quantity from the nominal signal range at M_{nom})					
Frequency output	%	± 0.1			
Voltage output	%	± 0.2			
Output signal when torque = zero					
Frequency output	kHz	10			
Voltage output	V	0			
Nominal (rated) output signal					
Frequency output					
with positive nominal torque	kHz	15 (5 V symmetric [1]/12 V asymmetric[2])			
with negative nominal torque	kHz	5 (5 V symmetric[1]/12 V asymmetric[2])			
Voltage output					
with positive nominal torque	V	+10			
with negative nominal torque	V	–10			
Load resistance					
Frequency output	kΩ	≥2			
Voltage output	kΩ	≥5			
Long-term drift over 48 h					
Voltage output	mV	≤ ± 3			
Measurement frequency range					
Voltage output	Hz	0 ... 1000 (–3 dB)			
Group delay time					
Frequency output	ms	0.15			
Voltage output	ms	0.9			
Residual ripple					
Voltage output	mV	0.4 (peak-to-peak)			

[1] RS 422 complementary signals; factory settings version SF1/SU2

[2] Factory setting version KF1 (no voltage switching is possible)

Nominal (rated) torque M_{nom}	N·m	50	100	200	500
for reference only	ft–lb	37.5	75	150	375
Temperature deviation per 10 K at nominal temperature					
range of output signal, related to the actual value of signal span					
Frequency output	%	< ± 0.1			
Voltage output	%	< ± 0.2			
to the zero signal, related to the nominal sensitivity					
Frequency output	%	< ± 0.1	< ± 0.05		
Voltage output	%	< ± 0.2	< ± 0.15		
Power supply (version KF1)					
Excitation voltage (square–wave)	V	54 ± 5 % (peak-to-peak)			
Release of calibration signal	V	80 ± 5 %			
Frequency	kHz	approx. 14			
Max. current consumption	A	1 (peak–to–peak)			
Preamplifier excitation voltage	V	0/0/+15			
Preamplifier, max. current consumption	mA	0/0/+25			
Power supply (version SF1/SU2)					
Nominal (rated) supply voltage (protective low voltage)	V (DC)	18 ... 30; asymmetric			
Current consumption in measuring mode	A	< 0.9			
Current consumption in start-up mode	A	< 2			
Rated consumption	W	< 12			
Linearity deviation including hysteresis, related to the nominal sensitivity					
Frequency output	%	< ± 0.1 (< ± 0.05 optional)			
Voltage output	%	< ± 0.1 (< ± 0.07 optional)			
Rel. standard deviation of the reproducibility					
according to DIN 1319, by reference to variation of the output signal	%	< ± 0.03			
Calibration signal		approx. 50 % of M_{nom}; value given on the identification plate			
Tolerance of calibration signal	%	< ± 0.05			

Speed measuring system					
Nominal (rated) torque M_{nom}	N·m	50	100	200	500
for reference only	ft–lb	37.5	75	150	375
Measuring system		Optical, using infrared light and metal slotted disc			
Mechanical increments	Number	360			
Positional tolerance of increments	mm	±0.05			
Slot width tolerance	mm	±0.05			
Pulses per revolution					
Adjustable	Number	360*); 180; 90; 60; 30; 15			
Output signal	V	5 symmetrical (RS 422 complementary signals) 2 square–wave signals, approx. 90° phase shifted			
Minimum rotation speed for adequate pulse stability	rpm	2			
Group delay time	µs	< 5, typ. 2.6			
Max. permitted axial displacement of rotor to stator	mm	±2			
Max. permitted radial displacement of rotor to stator	mm	±1			
Hysteresis of reversing the direction of rotation[3)] with relative oscillations between rotor and stator					
Torsional vibration of the rotor	deg.	< approx. 2			
Radial vibration of the stator	mm	< approx. 2			
Load resistance	kΩ	≥2			
Permitted degree of soiling in optical path of sensor fork (lenses, slotted disc)	%	< 50			
Protection against scattered light		Through fork and infrared filter			

*) Factory settings

3) Switchable

General information					
Nominal (rated) torque M_{nom}	N·m	50	100	200	500
for reference only	ft–lb	37.5	75	150	375
EMC					
Immunity from interference (DIN EN50082–2)					
Electromagnetic field					
Housing	V/m	10			
Lines	V_{pp}	10			
Magnetic field	A/m	100			
Bursting	kV	2/1			
ESD	kV	4/8			
Emissions (EME) (EN55011)					
Interference voltage		Class A			
Interference performance		Class B			
Interference field strength		Class B			
Protection class according to EN 60529		IP 54			
Weight, approx Rotor	kg	0.9	0.9	1.8	3.5
Rotor with speed measuring system	kg	1.1	1.1	1.8	3.5
Stator	kg	1.1	1.1	1.2	1.2
Reference temperature	°C [°F]	+23 [+73.4]			
Rated temperature range	°C [°F]	+10...+60 [+50 ...+140]			
Service temperature range	°C [°F]	–10...+60 [+14 ...+140]			
Storage temperature range	°C [°F]	–20...+70 [–4 ...+158]			
Impact resistance, test severity level to DIN IEC 68; Part 2-27; IEC 68-2-27-1987					
Number	n	1000			
Duration	ms	3			
Acceleration (half-sine)	m/s^2	650			
Vibration resistance, test severity level to DIN IEC 68, Part 2-6: IEC 68-2-6-1982					
Frequency range	Hz	5...65			
Duration	h	1.5			
Acceleration (amplitude)	m/s^2	50			

Nominal (rated) torque M_{nom}	N·m	50	100	200	500
for reference only	ft–lb	37.5	75	150	375
Nom. rotation speed (x1000)	rpm	15	15	15	12
Permissible load [4]					
Limit torque, related to M_{nom}	%	400	200		
Breaking torque, related to M_{nom}	%	>800	>400		
Axial limit force	kN	2	2	4	7
Lateral limit force	kN	1	1	3	6
Bending limit moment	N·m	70	70	140	500
Oscillation bandwidth according to DIN 50 100 (peak-to-peak) [5]	kN·m	0.16	0.16	0.32	0.8

[4] Each type of irregular stress can only be permitted with its given static load limit (bending moment, side load or axial load, exceeding the nominal rotation speed) if none of the others can occur. Otherwise the limit values must be reduced. If for instance 30 % of the bending moment and also 30 % of the side load are present, only 40 % of the axial load is permitted, provided that the nominal rotation speed is not exceeded. In the measurement result, permitted bending moments, axial forces and lateral forces can appear as approx. 1 % of nominal torque.

[5] In the T10F/50 N·m, it is permissible to exceed nominal torque by 100 %. In the T10F/100 N·m to 10 kN·m, nominal torque must not be exceeded.

Type		T10F				
Class of accuracy		0.1				
Torque measurement system						
Nominal (rated) torque M_{nom}	N·m	1 k	2 k	3 k	5 k	10 k
for reference only	ft–lb	750	1500	2250	3750	7500
Nominal (rated) sensitivity (nominal signal range between torque = zero and nominal torque)						
Frequency output	kHz	5				
Voltage output	V	10				
Characteristic tolerance (deviation of the actual output quantity from the nominal signal range at M_{nom})						
Frequency output	%	± 0.1				
Voltage output	%	± 0.2				
Output signal when torque = zero						
Frequency output	kHz	10				
Voltage output	V	0				
Nominal (rated) output signal						
Frequency output						
with positive nominal torque	kHz	15 (5 V symmetric[1)]/ 12 V asymmetric[2)])				
with negative nominal torque	kHz	5 (5 V symmetric[1)]/12 V asymmetric[2)])				
Voltage output						
with positive nominal torque	V	+10				
with negative nominal torque	V	–10				
Load resistance						
Frequency output	kΩ	≥2				
Voltage output	kΩ	≥5				
Long-term drift over 48 h						
Voltage output	mV	≤ ± 3				
Measurement frequency range						
Voltage output	Hz	0 ... 1000 (–3 dB)				
Group delay time						
Frequency output	ms	0.15				
Voltage output	ms	0.9				
Residual ripple						
Voltage output	mV	40 (peak-to-peak)				

1) RS 422 complementary signals; factory settings version SF1/SU2

2) Factory setting version KF1 (no voltage switching is possible)

Nominal (rated) torque M_{nom} for reference only	N·m ft–lb	1 k 750	2 k 1500	3 k 2250	5 k 3750	10 k 7500
Temperature deviation per 10 K at nominal temperature						
range of output signal, related to the actual value of signal span						
Frequency output	%	< ± 0.1				
Voltage output	%	< ± 0.2				
to the zero signal, related to the nominal sensitivity						
Frequency output	%	< ± 0.05				
Voltage output	%	< ± 0.15				
Power supply (version KF1)						
Excitation voltage (square–wave)	V	54 ± 5 % (peak-to-peak)				
Release of calibration signal	V	80 ± 5 %				
Frequency	kHz	approx. 14				
Max. current consumption	A	1 (peak–to–peak)				
Preamplifier excitation voltage	V	0/0/+15				
Preamplifier, max. current consumption	mA	0/0/+25				
Power supply (version SF1/SU2)						
Nominal (rated) supply voltage (protective low voltage)	V DC	18 ... 30; asymmetric				
Current consumption in measuring mode	A	< 0.9				
Current consumption in start-up mode	A	< 2				
Rated consumption	W	< 12				
Linearity deviation including hysteresis, related to the nominal sensitivity						
Frequency output	%	< ± 0.1 (< ± 0.05 optional)				
Voltage output	%	< ± 0.1 (< ± 0.07 optional)				
Rel. standard deviation of the reproducibility						
according to DIN 1319, by reference to variation of the output signal	%	< ± 0.03				
Calibration signal		approx. 50 % of M_{nom}; value given on the identification plate				
Tolerance of calibration signal	%	< ± 0.05				

Speed measuring system						
Nominal (rated) torque M_{nom}	N·m	1 k	2 k	3 k	5 k	10 k
for reference only	ft–lb	750	1500	2250	3750	7500
Measuring system		Optical, using infrared light and metal slotted disc				
Mechanical increments	Number	360	720			
Positional tolerance of increments	mm	±0.05				
Slot width tolerance	mm	±0.05				
Pulses per revolution						
Adjustable	Number	360*); 180; 90; 60; 30; 15	720; 360*); 180; 90; 60; 30; 15			
Output signal	V	5 symmetrical (RS 422 complementary signals) 2 square–wave signals, approx. 90° phase shifted				
Minimum rotation speed for adequate pulse stability	rpm	2				
Group delay time	µs	< 5, typ. 2.6				
Max. permitted axial displacement of rotor to stator	mm	±2				
Max. permitted radial displacement of rotor to stator	mm	±1				
Hysteresis of reversing the direction of rotation[3)] with relative oscillations between rotor and stator						
Torsional vibration of the rotor	deg.	< approx. 2				
Radial vibration of the stator	mm	< approx. 2				
Load resistance	kΩ	≥2				
Permitted degree of soiling in optical path of sensor fork (lenses, slotted disc)	%	< 50				
Protection against scattered light		Through fork and infrared filter				

*) Factory settings

3) Switchable

General information						
Nominal (rated) torque M_{nom}	N·m	1 k	2 k	3 k	5 k	10 k
for reference only	ft–lb	750	1500	2250	3750	7500
EMC						
Immunity from interference (DIN EN50082–2)						
Electromagnetic field						
Housing	V/m	10				
Lines	V_{pp}	10				
Magnetic field	A/m	100				
Bursting	kV	2/1				
ESD	kV	4/8				
Emissions (EME) (EN55011)						
Interference voltage		Class A				
Interference performance		Class B				
Interference field strength		Class B				
Protection class according to EN 60529		IP 54				
Weight, approx Rotor	kg	3.5	5.8	7.8	14.0	15.2
Rotor with speed measuring system	kg	3.5	5.8	7.8	14.0	15.2
Stator	kg	1.2	1.3	1.3	1.4	1.4
Reference temperature	°C [°F]	+23 [+73.4]				
Rated temperature range	°C [°F]	+10...+60 [+50 ...+140]				
Service temperature range	°C [°F]	–10...+60 [+14 ...+140]				
Storage temperature range	°C [°F]	–20...+70 [–4 ...+158]				
Impact resistance, test severity level to DIN IEC 68; Part 2-27; IEC 68-2-27-1987						
Number	n	1000				
Duration	ms	3				
Acceleration (half-sine)	m/s^2	650				
Vibration resistance, test severity level to DIN IEC 68, Part 2-6: IEC 68-2-6-1982						
Frequency range	Hz	5...65				
Duration	h	1.5				
Acceleration (amplitude)	m/s^2	50				
Permissible load [4]						
Limit torque, related to M_{nom}	%	200				160
Breaking torque, related to M_{nom}	%	>400				>300

[4] Each type of irregular stress can only be permitted with its given static load limit (bending moment, side load or axial load, exceeding the nominal rotation speed) if none of the others can occur. Otherwise the limit values must be reduced. If for instance 30 % of the bending moment and also 30 % of the side load are present, only 40 % of the axial load is permitted, provided that the nominal rotation speed is not exceeded. In the measurement result, permitted bending moments, axial forces and lateral forces can appear as approx. 1 % of nominal torque.

Nominal (rated) torque M_{nom}	N·m	1 k	2 k	3 k	5 k	10 k
for reference only	ft–lb	750	1500	2250	3750	7500
Nom. rotation speed (x1000)	rpm	12	10	10	8	8
Axial limit force	kN	7	12	14	22	31
Lateral limit force	kN	8	15	18	30	40
Bending limit moment	N·m	500	1000	1600	2500	4000
Oscillation bandwidth according to DIN 50 100 (peak-to-peak) [5]	kN·m	1.6	3.2	4.8	8.0	12.0

[5] In the T10F/50 N·m, it is permissible to exceed nominal torque by 100 %. In the T10F/100 N·m to 10 kN·m, nominal torque must not be exceeded.

Mechanical values 50 N·m ... 500 N·m					
Nominal (rated) torque M_{nom}	N·m	50	100	200	500
Torsional stiffness c_T	kN·m/rad	160	160	430	1000
Torsion angle at M_{nom}	deg.	0.018	0.036	0.027	0.028
Maximum displacement at axial force limit	mm	< 0.03			
Additional max. concentricity error at lateral force limit	mm	< 0.01			< 0.02
Additional plane–parallel deviation at bending moment limit	mm	< 0.02			
Balance quality–level to DIN ISO 1940		G 6.3			
Max. limits for relative shaft vibration (peak-to-peak)[6] Wave oscillations in the area of the connection flanges acc. to ISO 7919–3					
Normal mode (continuous operation)	µm	$s_{(p-p)} = \frac{9000}{\sqrt{n}}$ (n in rpm)			
Start and Stop mode/resonance ranges (temporary)	µm	$s_{(p-p)} = \frac{13200}{\sqrt{n}}$ (n in rpm)			
Mass moment of inertia of the rotor					
I_V (about axis of rotation) $\times 10^{-3}$	kg·m²	1.3	1.3	3.4	13.2
I_V with speed module $\times 10^{-3}$	kg·m²	1.7	1.7	3.5	13.2
Fractional mass moment of inertia (at measuring body)	%	51	51	44	39
Fractional mass moment of inertia with rotation speed measurement system (at measuring body)	%	40	40	43	39
Permitted max. static eccentricity of the rotor (radial)[7]	mm	± 2			
Permitted axial displacement between rotor and housing[7]	mm	± 2			± 3

[6] The impact of radial run-out deviations, eccentricity, defects of form, notches, marks, local residual magnetism, structural variations or material anomalies needs to be taken into account and isolated from the actual wave oscillation.

[7] See reduced values in the case of speed measuring system

Mechanical values 1 kN·m ... 10 kN·m						
Nominal (rated) torque M_{nom}	N·m	1 k	2 k	3 k	5 k	10 k
Torsional stiffness c_T	kN·m/rad	1800	3300	5100	9900	15000
Torsion angle at M_{nom}	deg.	0.032	0.034	0.034	0.029	0.038
Maximum displacement at axial force limit	mm	< 0.03				
Additional max. concentricity error at lateral force limit	mm	< 0.02		< 0.03		
Additional plane–parallel deviation at bending moment limit	mm	< 0.2				
Balance quality–level to DIN ISO 1940		G 6.3				
Max. limits for relative shaft vibration (peak–to–peak)[8)] Wave oscillations in the area of the connection flanges acc. to ISO 7919–3						
Normal mode (continuous operation)	µm	$s_{(p-p)} = \frac{9000}{\sqrt{n}}$ (n in rpm)				
Start and Stop mode/resonance ranges (temporary)	µm	$s_{(p-p)} = \frac{13200}{\sqrt{n}}$ (n in rpm)				
Mass moment of inertia of the rotor						
I_V (about axis of rotation) $\times 10^{-3}$	kg·m²	13.2	29.6	41	110	120
I_V with speed module $\times 10^{-3}$	kg·m²	13.2	29.6	41	110	120
Fractional mass moment of inertia (at measuring body)	%	39	38	33	31	33
Fractional mass moment of inertia with rotation speed measurement system (at measuring body)	%	39	38	33	31	33
Permitted max. static eccentricity of the rotor (radial)[9)]	mm	± 2				
Permitted axial displacement between rotor and housing[9)]	mm	± 3				

8) The impact of radial run-out deviations, eccentricity, defects of form, notches, marks, local residual magnetism, structural variations or material anomalies needs to be taken into account and isolated from the actual wave oscillation.

9) See reduced values in the case of speed measuring system

13 Supplementary technical information

13.1 Output signals

13.1.1 Output MD for torque (connector 1)

Symmetrical output signals (factory setting)

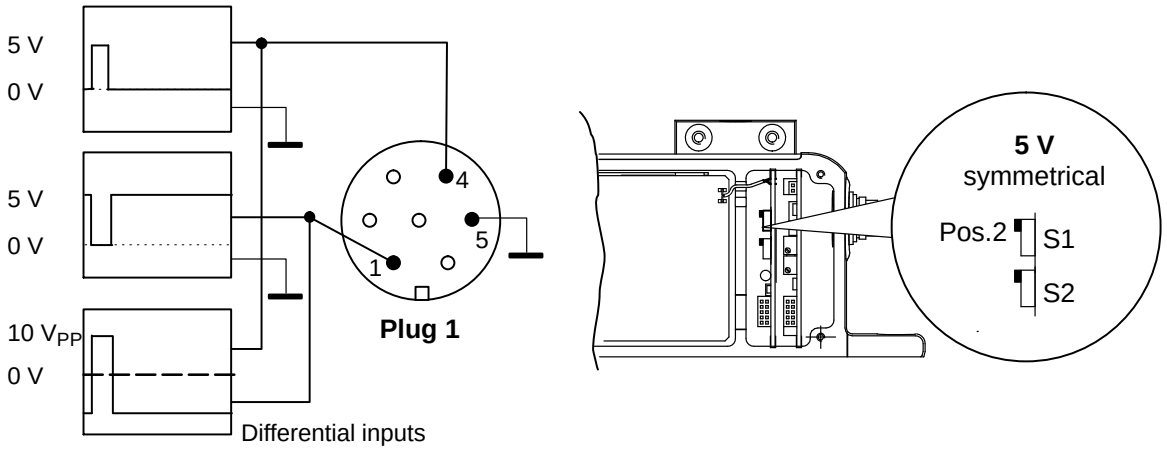

Asymmetrical output signals

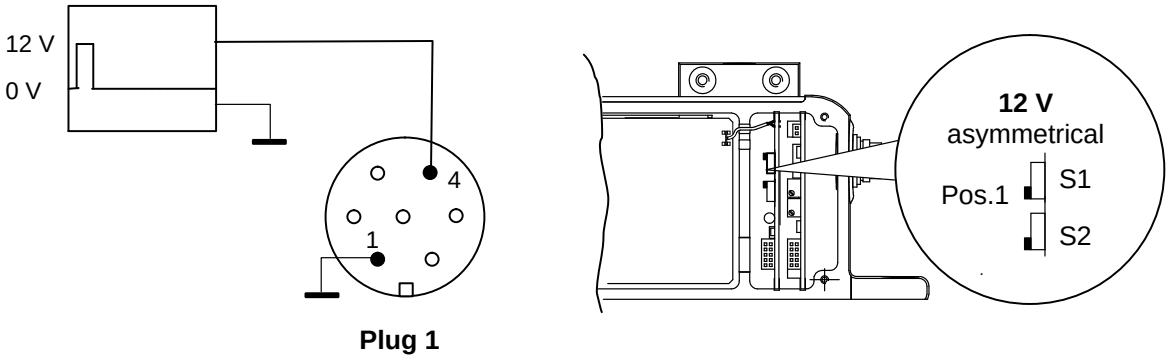

13.1.2 Output N for rotation speed (connector 2)

Symmetrical output signals (factory setting)

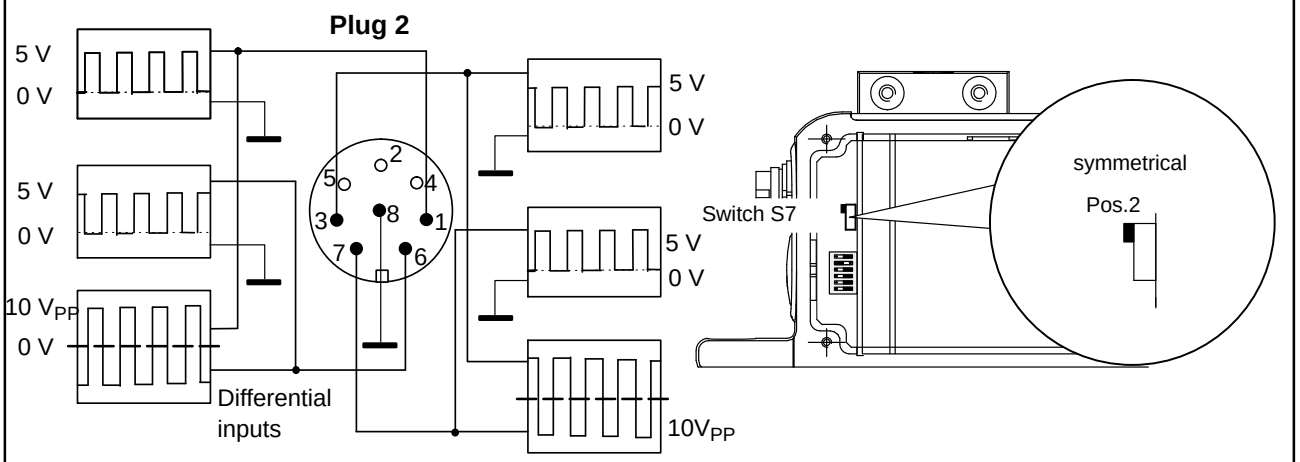

Asymmetrical output signals

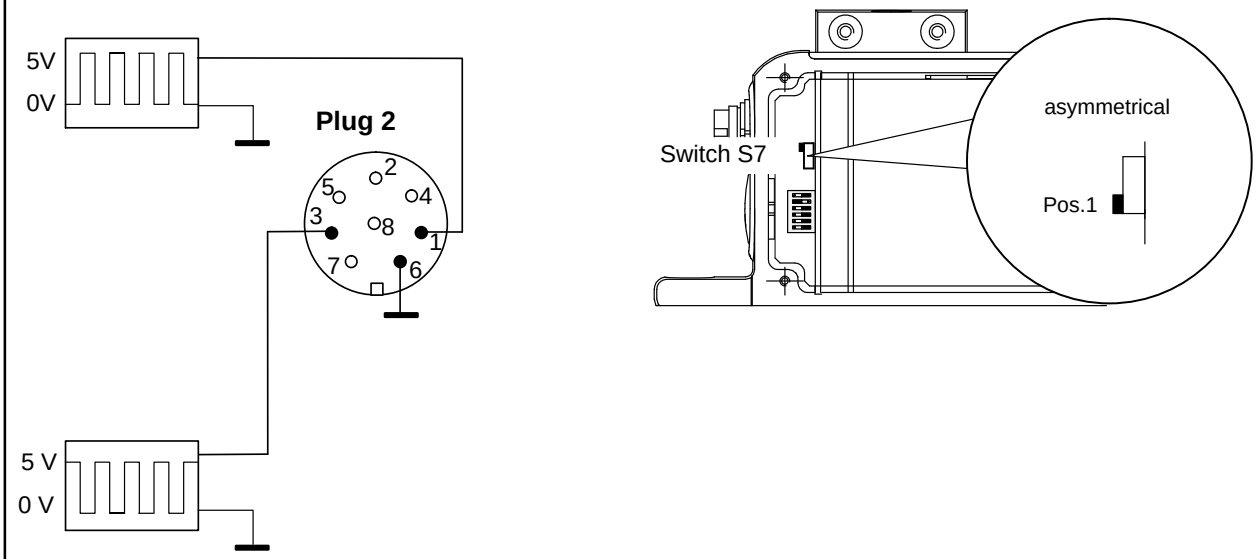

13.1.3 Output for rotation speed, double frequency, static signal for direction of rotation

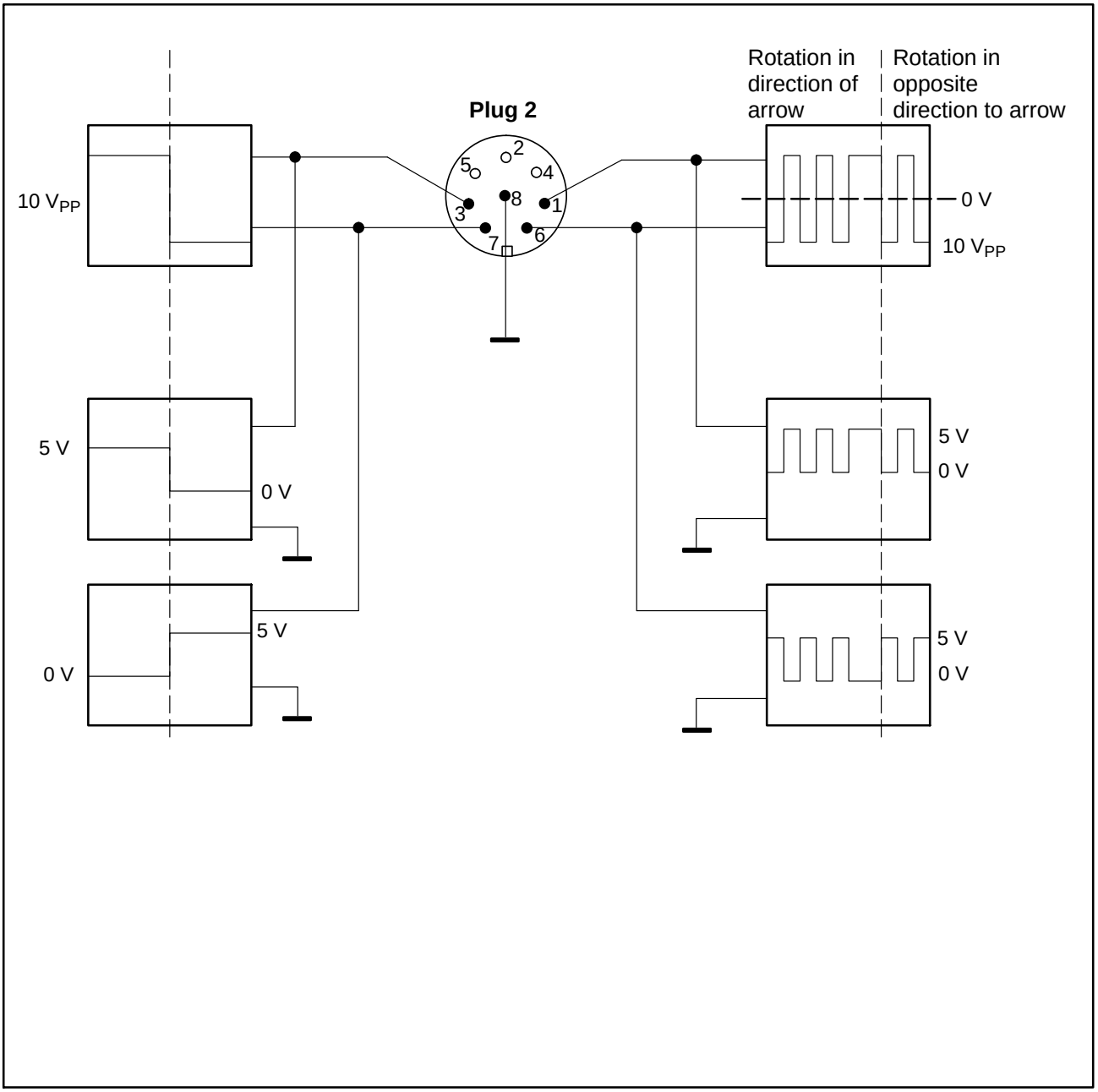

13.2 Circular run–out values

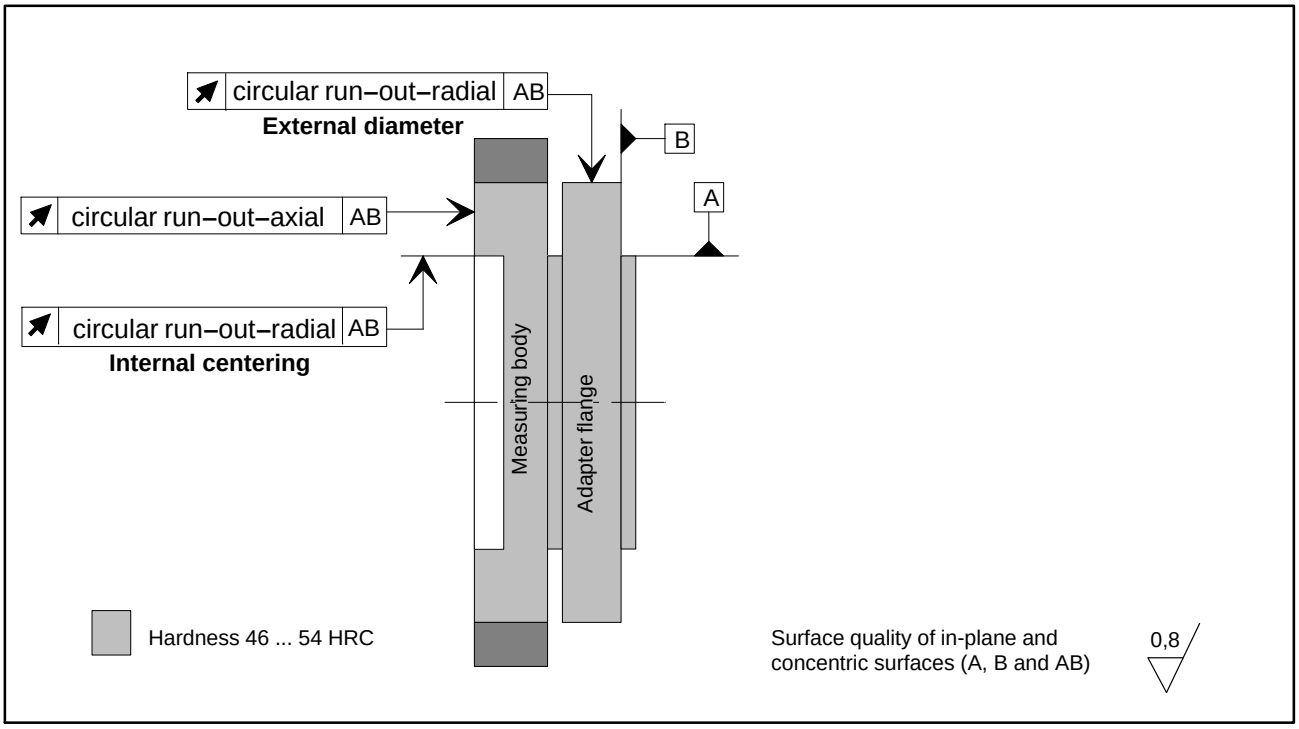

Measuring range	Circular run–out–axial tolerance (mm)	Circular run–out–radial tolerance (mm)
50 N·m	0.02	0.02
100 N·m	0.02	0.02
200 N·m	0.02	0.02
500 N·m	0.02	0.02
1 kN·m	0.02	0.02
2 kN·m	0.04	0.04
3 kN·m	0.04	0.04
5 kN·m	0.04	0.04
10 kN·m	0.04	0.04

13.3 Additional mechanical data

Nominal (rated) torque M_{nom}	N·m	50	100	200	500	1 k	2 k	3 k	5 k	10 k
Mechanical values										
Stiffness in axial direction c_a	kN/mm	90	90	190	410	430	500	900	1200	2100
Stiffness in radial direction c_r	kN/mm	200	200	280	430	440	750	820	1000	1430
Stiff. with bending moment around a radial axis c_b	kN·m/deg.	0.9	0.9	2.7	8.8	9.1	18.3	37.5	69	142
	kN·m/rad	51	51	155	510	520	1050	2150	3950	8000

Modifications reserved.
All details describe our products in general form only.They are not to be understood as express warranty and do not constitute any liability whatsoever.

7-2001.1510

Hottinger Baldwin Messtechnik GmbH

Im Tiefen See 45, D-64293 Darmstadt
Tel.: +49 6151 8030 Fax: +49 6151 803 9100
Email: support@hbm.com Internet: www.hbm.com

A0608-13.1 en

measurement with confidence